# Supplemental Manual to the Ecology Stormwater Management Manual for Western Washington

## Volume III Hydrologic Analysis and Flow Control BMPs

**City of Auburn Community Development and Public Works Departments**

**Effective Date: 1/1/2017**

**Version 2 Issued 7/10/2018**

**Version 3 Issued 1/6/2020**

**Version 4 Issued 1/6/2021**

# Table of Contents

Chapter 1 – Introduction ..... 1
1.1 Purpose of this Volume ..... 1
1.2 Content and Organization of this Volume ..... 1
Chapter 2 – Hydrologic Analysis ..... 2
2.1 Minimum Computational Standards ..... 2
2.3 Single Event Hydrograph Method ..... 2
2.3.1 Water Quality Design Storm ..... 2
2.4 Closed Depression Analysis ..... 2
Chapter 3 – Flow Control Design ..... 3
3.1 Roof Downspout Controls ..... 3
3.2 Detention Facilities ..... 4
3.2.1 Detention Ponds ..... 4
3.2.3 Detention Vaults ..... 12
3.2.4 Control Structures ..... 13
3.2.5 Other Detention Options ..... 14
Appendix III-C Washington State Department of Ecology Low Impact Development Flow Modeling Guidance ..... 15
Appendix III-D Conveyance System Design and Hydraulic Analysis ..... 15
D.1 Conveyance System Analysis Requirements ..... 15
D.2 Design Event ..... 17
D.3 Methods of Analysis ..... 17
D.4 Pipes, Culverts and Open Channels ..... 26
D.5 Outfalls Systems ..... 75
D.6 Pump Systems ..... 85
D.7 Easements and Access ..... 87
Appendix III-E City of Auburn Design Storm ..... 88
Appendix III-F Procedure for Conducting a Pilot Infiltration Test ..... 89

## List of Tables

Table 3.2- 1 Plant Selection Guide ..... 11
Table 3.2- 2 Grass Seed Mixes for Detention/Retention Facilities ..... 11
Table D.2- 1 Percentage Impervious For Fully Developed Conditions Offsite Tributary Areas ..... 17
Table D.3- 1 Runoff Coefficients for the Rational Method ..... 20
Table D.3- 2 Design Storm Frequency Coefficients for the Rational Method ..... 21
Table D.3- 3 Rainfall Intensities for the City of Auburn ..... 22
Table D.3- 4 "n" and "k" Values for Hydrographs ..... 25
Table D.4- 1 Percentage Impervious for Modeling Fully Developed Conditions ..... 27
Table D.4- 2 Manning's "n" Values for Pipes ..... 30
Table D.4- 3 Backwater Calculation Sheet Notes ..... 37
Table D.4- 4 Maximum Pipe Slopes, Velocities, and Anchor Requirements ..... 43
Table D.4- 5 Allowable Structures and Pipe Sizes ..... 44
Table D.4- 6 Constants for Inlet Control Equations ..... 53
Table D.4- 7 Entrance Loss Coefficients ..... 59
Table D.4- 8 Channel Protection ..... 66
Table D.4- 9 Values of "n" for Channels ..... 68
Table D.5- 1 Rock Protection at Outfalls ..... 78
Table E- 1 Design Storm Precipitation Values ..... 88
Table F- 1 In-Situ Infiltration Measurement Correction Factors to Estimate Long-Term Infiltration Rates ..... 90

## List of Figures

Figure D.4- 1 Pipe Sizing Nomograph ..... 29
Figure D.4- 2 Circular Channel Ratios ..... 32
Figure D.4- 3 Backwater Calculation Sheet ..... 35
Figure D.4- 4 Critical Depth of Flow for Circular Culverts ..... 38
Figure D.4- 5 Junction Head Loss in Structures ..... 39
Figure D.4- 6 Backwater Pipe Calculation Example ..... 40
Figure D.4- 7 Debris Barriers ..... 48
Figure D.4- 8 Headwater Depth for Smooth Interior Pipe Culverts with Inlet Control ..... 51
Figure D.4- 9 Headwater Depth for Corrugated Pipe Culverts with Inlet Control ..... 52
Figure D.4- 10 Head for Culverts (Pipe W/"N"=0.012) Flowing Full with Outlet Control ..... 56

Figure D.4- 11 Head for Culverts (Pipe W/"N"=0.024) Flowing Full with Outlet Control ..... 57
Figure D.4- 12 Ditches – Common Section Properties ..... 63
Figure D.4- 13 Drainage Ditches – Slope/Discharge Chart ..... 64
Figure D.4- 14 Geometric Elements of Common Sections ..... 65
Figure D.4- 15 Direct Step Backwater Method Example ..... 69
Figure D.4- 16 Mean Channel Velocity vs Medium Stone Weight (W50) and Equivalent Stone Diameter 74
Figure D.4- 17 Riprap Gradation Curve ..... 75
Figure D.5- 1 Pipe/Culvert Outfall Discharge Protection ..... 77
Figure D.5- 2 Gabion Outfall Detail ..... 80
Figure D.5- 3 Diffuser Tee – Energy Dissipating End Feature Example ..... 81
Figure D.5- 4 Flow Dispersal Trench ..... 83
Figure D.5- 5 Alternative Flow Dispersal Trench ..... 84

# Chapter 1 – Introduction

## 1.1 Purpose of this Volume

Volume III of the City of Auburn (COA) Supplemental Manual to the Department of Ecology's (Ecology) Stormwater Management Manual for Western Washington (SWMMWW) provides additional guidance for performing hydrologic and hydraulic analyses and designing flow control facilities to meet Minimum Requirement #7 – Flow Control.

The Ecology SWMMWW is available online at the link below:

2014 SWMMWW

## 1.2 Content and Organization of this Volume

COA Supplemental Manual Volume III is organized to correspond to the SWMMWW Volume III. This Volume should be used in conjunction with the SWMMWW to meet the hydrologic modeling requirements of the City and design flow control facilities for installation within the City of Auburn.

Important additions and changes contained in the COA Supplemental Manual for this Volume include:

- **Chapter 2: Hydrologic Analysis** contains several sections to assist with meeting the hydrologic analysis requirements for project submittal to the City, including:
    - **Section 2.1 Minimum Computational Standards** provides specific hydrologic modeling requirements for project submittal.
    - **Section 2.3.1 Water Quality Design Storm** for Single Event Hydrograph Method modeling used for the design of piped conveyance systems within the City.
    - **Section 2.4** contains important information on Closed Depression Analysis in the City.
- **Chapter 3: Flow Control Design** defines the preferred flow control facilities for the City.
    - **Section 3.2** provides guidance for designing detention facilities within the City, specifically **Section 3.2.1 Detention Ponds**.
- **Appendix III-D** contains detailed information on hydraulic analysis and the design of traditional storm conveyance systems.

*Omitted Sections*

Several chapters and sections of the 2014 SWMMWW do not require any additional clarification in the COA Supplemental Manual. Refer to the SWMMWW for the following chapters and sections:

- **Chapter 1: Introduction**
    - **Section 1.3**
- **Chapter 2: Hydrologic Analysis**
    - **Section 2.1.1**

- **Sections 2.2.1 – 2.2.3**
- **Section 2.3.2**

- **Chapter 3: Flow Control Design**
  - **Sections 3.3 – 3.4 (all subsections)**

# Chapter 2 – Hydrologic Analysis

## 2.1 Minimum Computational Standards

### *Western Washington Hydrology Model*

***Additional Requirements for the City of Auburn***

For flow control, treatment, and on-site stormwater management design submittal to the City the most current version of the Western Washington Hydrology Model (WWHM) shall be used. Information on the WWHM is provided in the SWMMWW. The software can be downloaded at the following website:

http://www.ecy.wa.gov/programs/wq/stormwater/wwhmtraining/index.html

More WWHM information is available at http://www.clearcreeksolutions.com

Hydrologic modeling submittal requirements are outlined the Stormwater Site Plan (SSP) report checklist found in Appendix J, Volume I of the COA Supplemental Manual.

The City **does not accept** MGS Flood or KCRTS (King County Runoff Time Series) modeling results for flow control, treatment, or on-site stormwater management design submittal.

## 2.3 Single Event Hydrograph Method

***Additional Requirements for the City of Auburn***

Single event hydrologic modeling shall be used for the design of conveyance systems only. See Appendix D, Volume III of the COA Supplemental Manual for more information on the design and modeling of conveyance systems.

### 2.3.1 Water Quality Design Storm

***Additional Requirements for the City of Auburn***

For sizing wetpool treatment facilities, the following design storm shall be used for the City:

6-month, 24-hour design storm: 1.44 inches

## 2.4 Closed Depression Analysis

***Additional Guidelines for the City of Auburn***

The applicable requirements of the SWMMWW, the COA Supplemental Manual (see Minimum Requirement #7 – Flow Control and #8 – Wetlands Protection), and the City's Critical Areas Ordinance and Rules in Chapter 16.10 of the Auburn City Code (ACC) should be thoroughly reviewed prior to proceeding with closed depression analysis. Guidance for modeling closed depressions and model calibration shall be provided by the Community Development and Public Works Departments.

# Chapter 3 – Flow Control Design

## 3.1 Roof Downspout Controls

***Additional Requirements for the City of Auburn***

The roof downspout control Best Management Practices (BMPs) listed in Chapter 3, Volume III of the SWMMWW are subject to the setback requirements defined in the Auburn City Code.

*Roof Downspout Controls in Potential Landslide Hazard Areas*

If or where the City has identified "geologically hazardous areas" (WAC 365-195-410), lots immediately adjacent to or within the hazard area shall collect roof runoff in a tightline system which conveys the runoff to the City system or to the base of the slope and then into the City system. Easements across adjacent properties may be necessary to convey drainage to the City system.

*Collect and Convey*

Conveyance of roof runoff to the City stormwater system is allowable when all roof downspout control BMPs listed in Chapter 3, Volume III of the SWMMWW have been determined to be infeasible by the City Engineer or his/her designee. Conveyance from roof runoff shall be connected to the City stormwater system at a catch basin or manhole. If a catch basin or manhole is not located at the discharge location, a storm main extension shall be required.

The runoff shall not be conveyed over driveways, sidewalks or other areas reserved for pedestrian traffic. A detail for the connection shall be submitted to the City for review and approval. Capacity analysis of the conveyance piping and catch basin leads will be required to ensure that adequate capacity exists.

For roof areas 10,000 sf and greater, please refer to Minimum Requirement #7, Flow Control.

Conveyance and discharge to the curb is allowable for single family homes when all roof downspout control BMPs listed in Chapter 3, Volume III of the SWMMWW and a direct connection to the City stormwater system has been determined to be infeasible by the City Engineer or his/her designee. Conveyance to the curb will only be allowed if a catch basin is located within 350 feet downstream of the discharge point. If a catch basin is not located within 350 feet of the discharge location, a storm main extension shall be required. Minimum pipe size for conveyance to the curb shall be 3 inches in diameter for single family homes. A detail for the curb discharge shall be submitted to the City for review and approval.

No flow credits will be allowed for the collect and convey option.

## 3.2 Detention Facilities

### 3.2.1 Detention Ponds

***Additional Requirements for the City of Auburn***

The design criteria in this section are specific to detention ponds located within the City. Many of the criteria also apply to infiltration ponds, water quality wetponds, and combined detention/wetponds in Volumes III and V of the SWMMWW. All detention ponds shall be appropriately and aesthetically located, designed and planted. Pre-approval of the design concept, including landscaping is required by the City for all proposed public ponds. All proposed public ponds are subject to the following minimum design criteria in addition to the criteria presented in the SWMMWW. Private ponds must adhere to the design criteria for detention ponds presented in Volume III of the SWMMWW.

*Design Criteria*

*General*

- Detention ponds shall be designed using rounded shapes and variations in slopes to provide a more visually aesthetic appearance and avoid a uniform shape on all sides.
- The total maximum depth of the detention pond from the bottom to the emergency overflow water surface elevation shall be fifteen feet (15').
- A three foot (3') wide bench shall be provided at the 10-year storm storage elevation except where there are walls forming the sides of the pond. In this case, the bench shall terminate at the wall.
- No rock, ecology block, gabion or mesh basket pond dividing walls are allowed. The design of the walls shall meet the following criteria:
    - The minimum width of the pond adjacent to the wall shall be 10'.
    - The wall shall be no higher than 3' if the width of the adjacent pond is 10-15' wide and a maximum of 5' high if the pond width is 15'-30'. Wall heights for areas exceeding this width will be reviewed on a case by case basis.
    - Constructed of minimum 3,000 psi structural reinforced concrete.
    - Walls must be water tight cast-in-place concrete.
    - The walls are designed and stamped by a structural engineer licensed in the State of Washington and structural calculations are provided.

*Side Slopes*

- For maintenance and aesthetic reasons, pond designs should minimize structural elements such as retaining walls. For ponds where retaining walls are required, they shall be limited to a maximum of three sides.
- Pond walls may be vertical retaining walls, provided:
    - The maximum height of pond walls shall be 15 feet.
    - All pond walls shall be retaining walls with soil backfill. Free-standing pond walls with exposed exterior sides are considered impoundments, and shall not be allowed.
    - They are constructed of minimum 3,000 psi structural reinforced concrete.
    - Walls must be water tight cast-in-place concrete.
    - At least 25% of the pond perimeter shall be a vegetated soil slope not steeper than 3H:1V as measured at the 100-year water surface elevation.
    - Access for maintenance per Appendix K, Volume I of the COA Supplemental Manual shall be provided.
    - The walls are designed and stamped by a structural engineer licensed in the State of Washington and structural calculations are provided.
    - Pond wall drains are required to be routed around the walls and connected directly into the pond.
- When vertical retaining walls are proposed, ladders or other safety measures may be required.

*Emergency Overflow Spillway*

- An emergency overflow spillway shall be provided and designed according to the criteria given in the SWMMWW.

*Access*

Refer to the COA Supplemental Manual Volume I, Appendix K – Stormwater Facility Access Requirements for detention pond access criteria.

*Fencing*

The following fencing shall be provided for all detention ponds:

- Fencing is required at the 10-year storage elevation and shall be installed on the outside edge of a 3’ wide bench. Fencing is required at the top of all vertical walls.
- Fences shall be 48 inches in height (see WSDOT Standard Plan L-20.10-03, Type 4 chain link fence).

- Access gates shall be a minimum 15 feet in width consisting of two swinging sections of equal width. Access gates will be set back a minimum of 20 feet from the point of entry to the public right-of-way.
- Vertical metal balusters or 9 gauge galvanized steel fabric with bonded black vinyl coating shall be used as fence material with the following aesthetic features:
    - All posts, cross bars, and gates shall be painted or coated black.
    - Fence posts and rails shall conform to WSDOT Standard Plan L-20.10-03 for Types 3 or 4 chain link fence.

*Setbacks*

Refer to Chapter 4, Volume V of the COA Supplemental Manual for general stormwater facility setback requirements and Auburn City Code titles and chapters relevant to setback requirements. Project proponents should consult the Auburn City Codes to determine all applicable setback requirements. Where a conflict occurs between setbacks, the most stringent of the setback requirements applies.

Setbacks for detention ponds shall include the following:

- Stormwater ponds shall be set back at least 100 feet from drinking water wells, septic tanks or drainfields, and springs used for public drinking water supplies.
- Infiltration facilities upgradient of drinking water supplies and within 1, 5, and 10-year time of travel zones must comply with Health Dept. requirements (Washington Wellhead Protection Program, DOH Publication # 331-018). Additional setbacks for infiltration facilities may be required per DOH publication #333-117, On-Site Sewage Systems Chapter 246-272A WAC.
- The 100-year water surface elevation shall be at least 10 feet from any structure or property line. If necessary, setbacks shall be increased from the minimum 10 feet in order to maintain a 1H:1V side slope for future excavation and maintenance. Vertical pond walls may necessitate an increase in setbacks.
- All pond systems shall be setback from sensitive areas, steep slopes, landslide hazard areas, and erosion hazard areas as governed by the Auburn City Code. Facilities near landslide hazard areas must be evaluated by a geotechnical engineer or qualified geologist licensed in Washington State. The discharge point shall not be placed on or above slopes 15% or greater, or above erosion hazard areas without evaluation by a geotechnical engineer or qualified geologist licensed in Washington State and approval by the City Engineer or his/her designee.
- For sites with septic systems, ponds shall be downgradient of the drainfield unless the site topography clearly prohibits subsurface flows from intersecting the drainfield.

*Seeps and Springs*

Seeps and springs that produce continuous intercepted flows on the project site shall be considered during the design process and included in the Stormwater Site Plan report. Flow monitoring of intercepted flow may be required for design purposes.

*Planting and Landscaping*

The following planting and landscaping requirements shall be provided for all detention ponds:

- All vegetative and construction debris and rocks larger than 1-inch shall be removed prior to installation of 3 inches of topsoil. The pond bottom and interior side slopes shall be seeded with an appropriate grass seed mixture. All remaining areas of the tract shall be planted with grass or be landscaped and mulched with a 4-inch cover of shredded wood mulch. Multiple plantings and mulching may be required until grass has established itself. A bond may be required to guarantee vegetation stabilization for detention facilities.

- Public and private storm drainage facilities should enhance natural appearances and be appropriate to the use of the site and the surrounding area. Landscaping shall be designed to create a natural-appearing setting while not adversely impacting the function and maintenance of the storm drainage facilities. A Landscape Plan with the Stormwater Site Plan is required for City review and approval.

- Landscaping is required for all stormwater tract areas (see below for areas not to be landscaped).

The following criteria shall be incorporated when designing landscaping for storm drainage facilities.

- Identify the type of landscaping and screening appropriate to the site taking into account zoning and proposed use. Landscaping and screening requirements are described in Title 18 of the ACC. The purpose of each type is to reflect the level of landscaping and screening density needed to maintain compatibility with the character of the neighborhood.
- An effort should be made to retain all significant trees on site, evergreens six inches (6”) or greater in diameter, or any deciduous tree four inches (4”) in diameter or greater as defined in Title 18 of the ACC. Diameter measurements are taken at four feet (4’) above grade elevation. Authorization by the City is required for removal of any significant trees.
- Select tree and shrub species from Table 3.2- 1 Plant Selection Guide below. Plant choices must reflect the functional and aesthetic needs of the site. Fall planting is recommended for optimal acclimation and survivability. An irrigation system will be required for public ponds to insure plant establishment. Irrigation systems may also be needed for private ponds if plantings are done in the spring/summer or in times of limited precipitation, unless other watering provisions are established.
- Appropriate grass seed mixes for detention ponds are given in Table 3.2- 2 Grass Seed Mixes for Detention/Retention Facilities below.

- Plant choices are not restricted to those listed in the Plant Selection Guide, but plant selection must be based on ease of maintenance, appropriateness to the use of the site (commercial, residential, or industrial), and survivability. Plant selection should correspond with street tree requirements and neighborhood character as appropriate. Selections are to be approved by the City during the review process. NOTE: Plants identified in the Guide are predominately native and reflect the soil conditions and water regimes of the area.
- Develop a Landscape Plan to scale identifying the location and species of existing trees and the location and schedule of species, quantity and size of all proposed tree, shrubs, and ground covers. Drawings should be scaled at 1”=10’ or 1”=20’ to optimally relay information on the plant location and placement. Construction specifications should indicate appropriate soil amendments where necessary and planting specifications as recommended by the American Standards for Nursery Stock and the American National Standards Institute (ANSI).
- No tree or shrub planting is allowed within pipeline easements, traveled surfaces, or over underground utilities.
- Trees shall be placed no closer than 10 feet and shrubs no closer than 5 feet from all pond fences.
- No trees or shrubs shall be planted within 10 feet of inlet or outlet pipes or manmade drainage structures such as spillways or flow spreaders. Species with roots that seek water, such as willow or poplar, shall be avoided within 50 feet of pipes or manmade structures.

The following tables contain the suggested trees, plants and grasses to be used in landscaping storm drainage facilities. The trees and plants listed are native to the region and should be chosen over non-native species. The lists shown are not all-inclusive, additional trees and plants may be acceptable upon approval of the City.

| Tree Selection for Storm Drainage Detention/Retention Facilities | | | | |
|---|---|---|---|---|
| **Suggested Trees** | | Tolerates Wet to Saturated Soils | Recommend Moderately Wet to Dry Soils | Recommend Dry Soils |
| **Botanical Name** | **Common Name** | | | |
| Acer circinatum | Vine Maple | | | ♦ |
| Alnus rubra | Red Alder | | | ♦ |
| Betula papyrifera | Paper Birch | ♦ | | |
| Corylus cornuta | Hazelnut | | | ♦ |
| Crataegus douglasii | Black Hawthorn | | | ♦ |
| Fraxinus latifolia | Oregon Ash | ♦ | | |
| Picea sitchensis | Sitka Spruce | ♦ | | |
| Pinus contorta | Shore Pine | | | ♦ |
| Pinus monticula | Western White Pine | | | ♦ |
| Populus tremuloides | Quaking Aspen | ♦ | | |
| Prunus virginiana | Choke Cherry | | | ♦ |
| Pseudotsuga menziesii | Douglas Fir | | | ♦ |
| Salix lasiandra | Pacific Willow | ♦ | | |
| Salix scouleriana | Scouler Willow | | ♦ | |
| Salix sitchensis | Sitka Willow | ♦ | | |
| Thuja pljcata | Western Red Cedar | | ♦ | |
| Tsuga heterophylla | Western Hemlock | | | ♦ |
| **Shrub Selection for Storm Drainage Detention/Retention Facilities** | | | | |
| **Suggested Shrubs** | | Tolerates Wet to Saturated Soils | Recommend Moderately Wet to Dry Soils | Recommend Dry Soils |
| **Botanical Name** | **Common Name** | | | |
| Amelanchier alnifolia | Serviceberry | | | ♦ |
| Cornus sericea | Red Osier Dogwood | ♦ | | |
| Gaultheria shallon | Salal | | | ♦ |
| Holidiscus discolor | Ocean Spray | | | ♦ |
| Lonicera involucrata | Black Twinberry | ♦ | | |
| Mahonia aquifolium | Tall Oregon Grape | | | ♦ |

| | | | | |
|---|---|---|---|---|
| Mahonia repens | Low Oregon Grape | | | ♦ |
| Oemleria cerasiformis | Indian Plum | | | ♦ |
| Physocarpus capitatus | Pacific Ninebark | ♦ | | |
| Ribes sanguineum | Red Flowering Currant | | | ♦ |
| Rosa nutkana | Nootka Rose | | ♦ | |
| Rosa rugosa | Rugosa Rose | ♦ | | |
| Rubus spectabilis | Salmonberry | | ♦ | |
| Rubus spectabilis | Thimbleberry | | ♦ | |
| Sambucus racemosa | Red Elderberry | | | ♦ |
| Symphoricarpos albus | Snowberry | | | ♦ |
| Vaccinium ovatum | Evergreen Huckleberry | | | ♦ |
| Vaccinium parviflorum | Red Huckleberry | | | ♦ |
| **Perennial Groundcover Selection for Storm Drainage Detention/Retention Facilities** | | | | |
| **Suggested Perennial Groundcover** | | Tolerates Wet to Saturated Soils | Recommend Moderately Wet to Dry Soils | Recommend Dry Soils |
| **Botanical Name** | **Common Name** | | | |
| Athyrium filix-femina | Lady Fern | | ♦ | |
| Dicentra formosa | Bleeding Heart | | | ♦ |
| Polystichum munitum | Sword Fern | | | ♦ |
| **Aquatic/Emergent Wetland Selection for Storm Drainage Detention/Retention Facilities** | | | | |
| **Suggested Aquatics/Emergent Wetland Plants** | | | Tolerates Open Water (3’ + Depth) to Shallow Standing Water (<1’ Depth) | |
| **Botanical Name** | **Common Name** | | | |
| Potamogeton natans | Floating Pondweed | | ♦ | |
| Lotus conicalitatus | Birdsfoot Trefoil | | ♦ | |
| Nymphaea odorata | American Water Lily | | ♦ | |
| Lemna minor | Common Duckweed | | ♦ | |
| Polygonum punctatum | Dotted Smartweed | | ♦ | |
| Polygonum amphibium | Water Smartweed | | ♦ | |
| Oenanthe sarmentosa | Water Parsley | | ♦ | |
| Alisma plantago-aquitica | American Waterplantain | | ♦ | |

| | | |
|---|---|---|
| Sparganium spp. | Bur-reed | ♦ |
| Sagittaria spp. | Arrowhead | ♦ |
| Scirpus acutus | Hardstem Bulrush | ♦ |
| Scirpus microcarpus | Small-fruited Bulrush | ♦ |
| Carex obnupta | Slough Sedge | ♦ |
| Carex languinosa | Wooly Sedge | ♦ |
| Eleocharis spp. | Spike Rush | ♦ |
| Carex spp. | Sedge | ♦ |
| Tolmiea menziesii | Piggy back plant | ♦ |
| Hordcum brachyantherum | Meadow Barley | ♦ |

**Table 3.2- 1 Plant Selection Guide**

| Grass Seed Mixes for Detention/Retention Facilities | | | |
|---|---|---|---|
| **Moisture Condition By Weight** | **Species** | **Common Name** | **Percent** |
| Very Moist | Agrosotis tenuis | Colonial Bentgrass | 50 |
| | Festuca ruba | Red Fescue | 10 |
| | Alopocuris pratensis | Meadow Foxtail | 40 |
| Moist | Festuca arundinacea | Meadow Fescue | 70 |
| | Agrosotis tenuis | Colonial Bentgrass | 15 |
| | Alopecurus pratensis | Meadow Foxtail | 10 |
| | Trifolium hybridum | White Clover | 5 |
| Moist-Dry | Agrosotis tenuis | Colonial Bentgrass | 10 |
| | Festuca ruba | Red Fescue | 40 |
| | Lolium multiflorum | Annual Ryegrass | 40 |
| | Trifolium repens | White Clover | 10 |
| Application rates: Hydroseed @ 60 lbs/acre Handseed @ 2 lbs/1000 square feet | | | |

**Table 3.2- 2 Grass Seed Mixes for Detention/Retention Facilities**

*Maintenance*

All private drainage systems shall require a signed Stormwater Easement and Maintenance Agreement (SWEMA) with the City. The agreement shall designate the systems to be maintained and the parties responsible for maintenance. Contact the City to determine the applicability of this requirement to a project.

Any standing water removed during the maintenance operation must be disposed of in a City approved manner. See the dewatering requirements in Volume II and Appendix G, Volume IV of the SWMMWW. *Pretreatment may be necessary.* Residuals must be disposed in accordance with state and local solid waste regulations (See Minimum Functional Standards for Solid Waste Handling, Chapter 173-304 WAC).

### 3.2.3 Detention Vaults

***Additional Requirements for the City of Auburn***

All publicly owned and maintained detention vaults are required to meet the minimum design criteria below, in addition to the criteria provided in the SWMMWW:

- A separate building permit is required for detention vaults.
- A buoyancy analysis is required to demonstrate that the vault will not be impacted by ground water.
- The maximum allowable depth of the deepest sump shall be twenty feet (20') from finished grade.
- Vault floors shall slope to a central location in addition to the 5% "v" slope outlined in the SWMMWW.
- All primary access points shall meet the following requirements:
    - A 5'x10' 2-door solid hatch shall be provided.
    - Hatch cover shall be made from ¼-inch aluminum with diamond-pattern tread plate reinforced for 150 psf live load.
    - Frame shall be made from extruded aluminum angle frame with strap anchors bolted around the perimeter.
    - A Type 316 stainless steel slam lock with fixed interior handle and removable exterior turn/lift handle with steel cam-action hinges that are concealed from the exterior of the door shall be used.
    - A spring-assisted lift with hold-open feature torsion bars shall be installed. Automatic hold-open arm with grip handle release shall be added.
    - Polypropylene rungs or an aluminum ladder shall be installed extending from the hatch to the bottom of the vault.
    - A ladder-up mechanism shall be installed centered over the rungs or ladder below the hatch.
    - All hardware shall be zinc-coated.

- The 5'x10' hatch opening shall be located over the sump or low point or points in the vault.
- Vault outlet control structures shall be located in a separate manhole.
- The vault design shall include internal galvanized hooks capable of supporting 250 pounds each and located within 2 feet of each opening for the temporary attachment of lights and other maintenance equipment.
- An access opening shall be provided directly above each inlet connection to the vault.
- A minimum of two access openings shall be provided into each cell.
- In unpaved locations, access hatches and openings shall have a 3-foot wide paved collar.
- Vaults shall be located on a separate tract. Vaults shall not be located in the public right of way or access tracts.
- Vault locations shall include a drivable surface to all access openings.
- Vault access must accommodate large vehicle access with turning radius of 48 feet.
- Additional site access shall be provided per Appendix K, Volume I of the COA Supplemental Manual.

*Setbacks*

Refer to Chapter 4, Volume V of the COA Supplemental Manual for general stormwater facility setback requirements and Auburn City Code titles and chapters relevant to setback requirements. Project proponents should consult the Auburn City Codes to determine all applicable setback requirements. Where a conflict occurs between setbacks, the most stringent of the setback requirements applies.

Setbacks for detention vaults shall include the following:

- Vaults shall be at least 10 feet from any structure or property line. If necessary, setbacks shall be increased from the minimum 10 feet in order to maintain a 1H:1V side slope for future excavation and maintenance, access, or other site conditions.

### 3.2.4 Control Structures

***Additional Requirements for the City of Auburn***

*Design Criteria*

- Access opening shall be oriented in a manner to facilitate inspection and maintenance.
- Control structure details found in the SWMMWW shall be superseded by City of Auburn Standard Details S-09, which shall be used as a design guideline and be updated to be site specific.

### 3.2.5 Other Detention Options

***Additional Requirements for the City of Auburn***

*Use of Parking Lots for Additional Detention*

- The depth of water detained shall not exceed 0.5 feet (6 inches) at any location in the parking lot for runoff events up to and including the 100 year event.
- The emergency overflow elevation shall be a minimum of one foot (1') below the finish floor elevation of adjacent building, adjacent properties, landscaping and parking stalls.
- At no time shall parking lot ponding encroach on walking paths, sidewalks, or American Disabilities Act (ADA) required parking stalls or adjacent ADA access.

*Use of Alternate Storm Detention Facilities*

- Alternate Storm Detention Facilities are defined as detention facilities that are not classified as ponds, tanks, or vaults.
- Use of Alternate Storm Detention Facilities are subject to deviation approval except if the facility is one of the following allowed proprietary Alternate Storm Detention systems or their equivalents: RTanks, StormTech, ChamberMaxx.
- Deviations require documentation that addresses ground water levels, buoyancy, owner inspection, cleaning and other maintenance activities, and City inspection requirements.

# Appendix III-C Washington State Department of Ecology Low Impact Development Flow Modeling Guidance

***Additional Requirements for the City of Auburn***

**Synthetic turf field/grass shall be modeled as grass over underlying soil type (till or outwash) without underlying perforated drain pipes, and as impervious surface with underlying perforated drain pipes.**

# Appendix III-D Conveyance System Design and Hydraulic Analysis

***Additional Requirements for the City of Auburn***

This Appendix presents acceptable methods for the analysis and design of storm and surface water conveyance systems. Conveyance systems can be separated into the following categories:

- Pipe systems
- Culverts
- Open Channels (ditches, swales)
- Outfalls

Pipe systems, culverts, and open channels are addressed in Section D.4. Outfalls are addressed in Section D.5.

The purpose of a conveyance system is to drain surface water, up to a specific design flow, from properties so as to provide protection to property and the environment. This Appendix contains detailed design criteria, methods of analysis, and standard details for all components of a conveyance system. A complete basic understanding of hydrology and hydraulics and the principles on which the methodology of hydrologic analysis is based is essential for the proper and accurate application of methods used in designing conveyance systems.

- Refer to Appendix K, Volume I of the COA Supplemental Manual for access easement requirements for storm conveyance systems.

- Where storm drainage is directed against a curb, the curb shall be either a concrete curb and gutter or concrete vertical curb. An extruded curb or asphalt wedge section in any form will not be allowed.

## D.1 Conveyance System Analysis Requirements

***Additional Requirements for the City of Auburn***

The project engineer shall provide calculations demonstrating the adequacy of all the project's existing and proposed surface water conveyance system components. The project engineer shall provide

calculations regarding all off-site flows as required by Volume I of the SWMMWW and the COA Supplemental Manual. All relevant work/calculations shall be submitted for City review in the Stormwater Site Plan (SSP) report as part of a permit submittal. Small and/or isolated storm system (detention and water quality treatment) designs shall address how they will be incorporated into larger drainage systems likely to be built in the future. For example, site specific frontage and half street improvement designs shall also use a corridor analysis approach to ensure that they can be incorporated into larger future storm systems.

*D.1.1 On-site Analysis*

All proposed on-site surface water conveyance systems shall be sized to meet the required design event per Section D.2 of this Appendix.

*D.1.2 Offsite Analysis (1/4 mile Downstream Analysis)*

Refer to Minimum Requirement #10 – Offsite Analysis and Mitigation in Volume I of the COA Supplemental Manual for more information on downstream analysis. All projects required to meet Minimum Requirements #1-#5 or #1-#9 shall complete a qualitative downstream analysis. A quantitative analysis shall be required as described in Section 2.5.10, Volume I of the COA Supplemental Manual.

The engineer must field survey all existing storm drainage systems downstream from the project for a minimum of ¼ mile from the point of connection to the existing public drainage system, unless a City-identified trunk-line is encountered. The goal of the inspection and analysis is to evaluate whether the capacity of the drainage system(s) is adequate to handle the existing flows, flows generated by the proposed project, and any overflow. Adequacy will be evaluated based on conveyance capacity, flooding problems, erosion damage or potential, amount of freeboard in channels and pipes, and storage potential within the system. **All existing and proposed off-site surface water conveyance systems shall be sized to convey flows from the required design storm event per Section D.2.**

The offsite analysis may be stopped shorter than the required ¼-mile downstream if the analysis reaches a City-identified trunk line. Storm drainage pipes greater than or equal to 36 inches in diameter are generally considered trunk lines. However, where minimal grades (less than 0.5%) necessitated the use of a larger pipe to maintain flows, the City may not consider a pipe greater than or equal to 36 inches as a trunk line. Contact the City of Auburn Storm Utility at 253-931-3010 for final determination of whether a storm drainage pipe is a trunk line.

If a capacity problem or stream bank erosion problem is encountered, the flow durations from the project will be restricted per Minimum Requirement #7 – Flow Control. The design shall meet the requirements of Chapter 3, Volume III of the SWMMWW and the COA Supplemental Manual. For projects that do not meet the thresholds of Minimum Requirement #7, and are therefore not required

to provide flow control by the Department of Ecology, the project proponent may be allowed to correct the downstream problem instead of providing on-site flow control.

## D.2 Design Event

***Additional Requirements for the City of Auburn***

The design events for all existing and new conveyance systems are as follows:

- All private pipe systems less than 24 inches in diameter shall be designed to convey at minimum the 10-year, 24-hour peak flow rate without surcharging (the water depth in the pipe must not exceed 90% of the pipe diameter).
- All private pipe systems greater than or equal to 24-inches in diameter and all public pipe systems shall be designed to convey the 25-year, 24-hour peak flow rate without surcharging (the water depth in the pipe must not exceed 90% of the pipe diameter).
- Culverts shall convey the 25-year, 24-hour peak flow rate without submerging the culvert inlet (i.e. HW/D $\leq$ 1).
- Constructed and natural channels shall contain the 100-year, 24-hour storm event.

*D.2.1 Additional Design Criteria*

- For the 100-year event, overtopping of the pipe conveyance system may occur. However, the additional flow shall not extend beyond half the lane width of the outside lane of the traveled way and shall not exceed 4 inches in depth at its deepest point.
- All conveyance systems shall be designed for fully developed conditions. The fully developed conditions for the project site shall be derived from the percentages of proposed and existing impervious area. For off-site tributary areas, typical percentages of impervious area for fully developed conditions are provided in Table D.2- 1 Percentage Impervious For Fully Developed Conditions Offsite Tributary Areas below.
- Conveyance systems shall be modeled as if no on-site detention is provided upstream.

| Land Use Description | Percentage Impervious |
|---|---|
| Commercial/Industrial | 85% |
| Residential | 65% |

**Table D.2- 1 Percentage Impervious For Fully Developed Conditions Offsite Tributary Areas**

## D.3 Methods of Analysis

***Additional Requirements for the City of Auburn***

Proponent site surveys shall be used as the basis for determining the capacity of existing systems. For preliminary analyses only, the proponent may use City drainage maps and record drawings. For naturally

occurring drainage systems, drainage ditches, or undeveloped drainage courses, the engineer must take into account the hydraulic capacity of the existing drainage course and environmental considerations such as erosion, siltation, and increased water velocities or water depths.

Describe capacities, design flows, and velocities in each reach. Describe required materials or specifications for the design (e.g., rock-lined for channels when velocity is exceeded; high density polyethylene pipe needed for steep slope). Comprehensive maps showing the flow route and basins for both the on-site and off-site surface water (for the minimum 1/4 mile downstream distance) must be included in the storm drainage calculations.

If hydrologic modeling is required, the Project Engineer shall state methods, assumptions, model parameters, data sources, and all other relevant information to the analysis. If model parameters are used that are outside the standards of practice, or if parameters are different than those standards, justify the parameters. Copies of all calculations for capacity of channels, culverts, drains, gutters and other conveyance systems shall be included with the SSP report. If used, include all standardized graphs and tables and indicate how they were used. Show headwater and tailwater analysis for culverts when necessary. Provide details on references and sources of information used. Single event modeling shall be used for designing conveyance systems; WWHM is not accepted.

For a full description of the information required for preparing a SSP report consult Chapter 3, Volume I of the SWMMWW **and** the Stormwater Site Plan Submittal Requirements Checklist found in Appendix J, Volume I of the COA Supplemental Manual.

*D.3.1 Rational Method*

This method shall only be used for preliminary pipe sizing and capacity analysis.

The Rational Method is a simple, conservative method for analyzing and sizing conveyance elements serving small drainage sub-basins, subject to the following specific limitations:

- Only for use in predicting peak flow rates for sizing conveyance elements **(not for use in sizing flow control or treatment facilities)**
- Drainage sub-basin area, *A*, cannot exceed 10 acres for a single peak flow calculation
- The time of concentration, $T_c$, must be computed using the method described below and cannot exceed 100 minutes. A minimum $T_c$ of 6.3 minutes shall be used.
- Unlike other methods of computing times of concentration, the 6.3 minutes is not an initial collection time to be added to the total computed time of concentration.

*D.3.1.1 Rational Method Equation*

The following is the traditional Rational Method equation:

$Q_R = CI_RA$ (equation 1)

Where $Q_R$ = peak flow (cfs) for a storm of return frequency R

C = estimated runoff coefficient (ratio of rainfall that becomes runoff)

$I_R$ = peak rainfall intensity (inches/hour) for a storm of return frequency R

A = drainage sub-basin area (acres)

When the composite runoff coefficient, $C_c$ (see equation 2) of a drainage basin exceeds 0.60, the $T_c$ and peak flow rate from the impervious area should be computed separately. The computed peak rate of flow for the impervious surface alone may exceed that for the entire drainage basin using the value at $T_c$ for the total drainage basin. The higher of the two peak flow rates shall then be used to size the conveyance element.

*"C" Values*

The allowable runoff coefficients to be used in this method are shown by type of land cover in Table D.3-1 Runoff Coefficients for the Rational Method below. These values were selected following a review of the values previously accepted by the City for use in the Rational Method and as described in several engineering handbooks. The value for single family residential areas were computed as composite values (as illustrated in the following equation) based on the estimated percentage of coverage by roads, roofs, yards, and unimproved areas for each density. For drainage basins containing several land cover types, the following formula may be used to compute a composite runoff coefficient, $C_c$:

$C_c = (C_1A_1+C_2A_2+...+C_nA_n)/A_t$ (equation 2)

Where $A_t$ = total area (acres)

$A_{1,2...n}$ = areas of land cover types (acres)

$C_{1,2...n}$ = runoff coefficients for each area land cover type

| **GENERAL LAND COVERS** | | | |
|---|---|---|---|
| **LAND COVER** | **C** | **LAND COVER** | **C** |
| Dense forest | 0.10 | Playgrounds | 0.30 |
| Light forest | 0.15 | Gravel areas | 0.80 |

| | | | |
|---|---|---|---|
| Pasture | 0.20 | Pavement and roofs | 0.90 |
| Lawns | 0.25 | Open water (pond, lakes, wetlands) | 1.00 |
| **SINGLE FAMILY RESIDENTIAL AREAS***<br><br>***[Density is in dwelling units per gross acreage (DU/GA)]*** | | | |
| **LAND COVER DENSITY** | **C** | **LAND COVER DENSITY** | **C** |
| 0.20 DU/GA (1 unit per 5 ac.) | 0.17 | 3.00 DU/GA | 0.42 |
| 0.40 DU/GA (1 unit per 2.5 ac.) | 0.20 | 3.50 DU/GA | 0.45 |
| 0.80 DU/GA (1 unit per 1.25 ac.) | 0.27 | 4.00 DU/GA | 0.48 |
| 1.00 DU/GA | 0.30 | 4.50 DU/GA | 0.51 |
| 1.50 DU/GA | 0.33 | 5.00 DU/GA | 0.54 |
| 2.00 DU/GA | 0.36 | 5.50 DU/GA | 0.57 |
| 2.50 DU/GA | 0.39 | 6.00 DU/GA | 0.60 |

*Based on average 2,500 square feet per lot of impervious coverage.

For combinations of land covers listed above, an area-weighted "$C_c$ x $A_t$" sum should be computed based on the equation $C_c \times A_t = (C_1 \times A_1)+(C_2 \times A_2)\ldots(C_n \times A_n)$, where $A_t = (A_1+A_2\ldots A_n)$, the total drainage basin area

**Table D.3- 1 Runoff Coefficients for the Rational Method**

*"$I_R$" Peak Rainfall Intensity*

The peak rainfall intensity, $I_R$, for the specified design storm of return frequency *R* is determined using a unit peak rainfall intensity factor, $i_R$, in the following equation:

$$I_R = (P_R)(i_R) \qquad \text{(equation 3)}$$

Where $P_R$ = the total precipitation at the project site for the 24-hour duration storm event for the given return frequency. Refer to Table D.3- 2 Design Storm Frequency Coefficients for the Rational Method below for $P_R$ values.

$i_R$ = the unit peak rainfall intensity factor

The unit peak rainfall intensity factor, $i_R$, is determined by the following equation:

$$i_R = (a_R)(T_c)^{(-bR)} \qquad \text{(equation 4)}$$

Where $T_c$ = time of concentration (minutes), calculated using the method described below and subject to equation limitations (6.3 < Tc < 100)

$a_R$, $b_R$ = coefficients from Table D.3- 2 used to adjust the equation for the design storm return frequency R

Table D.3- 3 Rainfall Intensities for the City of Auburn below includes values of rainfall intensity as a function of time of concentration, calculated using the coefficients from Table D.3- 2.

| **Design Storm Frequency** | ***$P_R$ (inches)*** | ***$a_R$*** | ***$b_R$*** |
|---|---|---|---|
| 2 years | 2.0 | 1.58 | 0.58 |
| 5 years | 2.5 | 2.33 | 0.63 |
| 10 years | 3.0 | 2.44 | 0.64 |
| 25 years | 3.5 | 2.66 | 0.65 |
| 50 years | 3.5 | 2.75 | 0.65 |
| 100 years | 4.0 | 2.61 | 0.63 |

**Table D.3- 2 Design Storm Frequency Coefficients for the Rational Method**

| | **Rainfall Intensity ($I_R$) (inches per hour)** | | | | | |
|---|---|---|---|---|---|---|
| | **Design storm recurrence interval (probability)** | | | | | |
| **Time of Concentration (min)** | **2-year (50%)** | **5-year (20%)** | **10-year (10%)** | **25-year (4%)** | **50-year (2%)** | **100-year (1%)** |
| 6.3 | 1.09 | 1.83 | 2.25 | 2.81 | 2.91 | 3.27 |
| 7 | 1.02 | 1.71 | 2.11 | 2.63 | 2.72 | 3.06 |
| 8 | 0.95 | 1.57 | 1.93 | 2.41 | 2.49 | 2.82 |
| 9 | 0.88 | 1.46 | 1.79 | 2.23 | 2.31 | 2.62 |
| 10 | 0.83 | 1.37 | 1.68 | 2.08 | 2.15 | 2.45 |

| | | | | | | |
|---|---|---|---|---|---|---|
| 11 | 0.79 | 1.29 | 1.58 | 1.96 | 2.03 | 2.30 |
| 12 | 0.75 | 1.22 | 1.49 | 1.85 | 1.91 | 2.18 |
| 13 | 0.71 | 1.16 | 1.42 | 1.76 | 1.82 | 2.07 |
| 14 | 0.68 | 1.10 | 1.35 | 1.67 | 1.73 | 1.98 |
| 15 | 0.66 | 1.06 | 1.29 | 1.60 | 1.66 | 1.90 |
| 16 | 0.63 | 1.02 | 1.24 | 1.54 | 1.59 | 1.82 |
| 17 | 0.61 | 0.98 | 1.19 | 1.48 | 1.53 | 1.75 |
| 18 | 0.59 | 0.94 | 1.15 | 1.42 | 1.47 | 1.69 |
| 19 | 0.57 | 0.91 | 1.11 | 1.37 | 1.42 | 1.63 |
| 20 | 0.56 | 0.88 | 1.08 | 1.33 | 1.37 | 1.58 |
| 25 | 0.49 | 0.77 | 0.93 | 1.15 | 1.19 | 1.37 |
| 30 | 0.44 | 0.68 | 0.83 | 1.02 | 1.06 | 1.22 |
| 35 | 0.40 | 0.62 | 0.75 | 0.92 | 0.95 | 1.11 |
| 40 | 0.37 | 0.57 | 0.69 | 0.85 | 0.88 | 1.02 |
| 45 | 0.35 | 0.53 | 0.64 | 0.78 | 0.81 | 0.95 |
| 50 | 0.33 | 0.50 | 0.60 | 0.73 | 0.76 | 0.89 |
| 55 | 0.31 | 0.47 | 0.56 | 0.69 | 0.71 | 0.84 |
| 60 | 0.29 | 0.44 | 0.53 | 0.65 | 0.67 | 0.79 |
| 70 | 0.27 | 0.40 | 0.48 | 0.59 | 0.61 | 0.72 |
| 80 | 0.25 | 0.37 | 0.44 | 0.54 | 0.56 | 0.66 |
| 90 | 0.23 | 0.34 | 0.41 | 0.50 | 0.52 | 0.61 |
| 100 | 0.22 | 0.32 | 0.38 | 0.47 | 0.48 | 0.57 |

**Table D.3- 3 Rainfall Intensities for the City of Auburn**

*"$T_c$" Time of Concentration*

The time of concentration is defined as the time it takes runoff to travel overland (from the onset of precipitation) from the most hydraulically distant location in the drainage basin to the point of discharge.

Due to the mathematical limits of the equation coefficients, values of $T_c$ less than 6.3 minutes or greater than 100 minutes cannot be used. Therefore, real values of $T_c$ less than 6.3 minutes must be assumed to be equal to 6.3 minutes, and values greater than 100 minutes must be assumed to be equal to 100 minutes.

$T_c$ is computed by summation of the travel times $T_t$ of overland flow across separate flowpath segments. The equation for time of concentration is:

$$T_c = T_1 + T_2 + \ldots + T_n \qquad \text{(equation 5)}$$

Where $T_{1,2\ldots n}$ = travel time for consecutive flowpath segments with different categories or flowpath slope

Travel time for each segment, *t*, is computed using the following equation:

$$T_t = L/60V \qquad \text{(equation 6)}$$

where $T_t$ = travel time (minutes)

$T_t$ through an open water body (such as a pond) shall be assumed to be zero with this method.

$T_t$ = Travel time for each segment (ft)

L = the distance of flow across a given segment (feet)

V = average velocity (ft/s) across the land cover = $k_R \sqrt{s_o}$

Where $k_R$ = time of concentration velocity factor; see Table D.3- 4 "n" and "k" Values for Hydrographs.

$s_0$ = slope of flowpath (feet/feet)

| **"$n_s$" Sheet Flow Equation Manning's Values (for the initial 300 ft. of travel)** | |
|---|---|
| **Manning values for sheet flow only, from Overton and Meadows 1976[1]** | **$n_s$** |

| | |
|---|---|
| Smooth surfaces (concrete, asphalt, gravel, or bare hand packed soil) | 0.011 |
| Fallow fields or loose soil surface (no residue) | 0.05 |
| Cultivated soil with residue cover ≤20% | 0.06 |
| Cultivated soil with residue cover >20% | 0.17 |
| Short prairie grass and lawns | 0.15 |
| Dense grasses | 0.24 |
| Bermuda grass | 0.41 |
| Range (natural) | 0.13 |
| Woods or forest with light underbrush | 0.40 |
| Woods or forest with dense underbrush | 0.80 |
| **"k" Values Used in Travel Time/Time of Concentration Calculations[2]** | |
| **Sheet Flow** | **$k_R$** |
| Forest with heavy ground litter and meadow | 2.5 |
| Fallow or minimum tillage cultivation | 4.7 |
| Short grass pasture and lawns | 7.0 |
| Nearly bare ground | 10.1 |
| Grasses waterway | 15.0 |
| Paved area (sheet flow) and shallow gutter flow | 20.0 |
| **Shallow Concentrated Flow (After the initial 300 ft. of sheet flow, R = 0.1)** | **$k_s$** |
| 1. Forest with heavy ground litter and meadows (n = 0.10) | 3 |
| 2. Brushy ground with some trees (n= 0.060) | 5 |
| 3. Fallow or minimum tillage cultivation (n = 0.040) | 8 |

| | |
|---|---|
| 4. High grass (n = 0.035) | 9 |
| 5. Short grass, pasture and lawns (n = 0.030) | 11 |
| 6. Nearly bare ground (n = 0.025) | 13 |
| 7. Paved and gravel areas (n = 0.012) | 27 |
| **Channel Flow (intermittent) (At the beginning of visible channels R = 0.2)** | **$k_c$** |
| 1. Forested swale with heavy ground litter (n = 0.10) | 5 |
| 2. Forested drainage course/ravine with defined channel bed (n = 0.050) | 10 |
| 3. Rock-lined waterway (n = 0.035) | 15 |
| 4. Grassed waterway (n = 0.030) | 17 |
| 5. Earth-lined waterway (n = 0.025) | 20 |
| 6. CMP pipe, uniform flow (n = 0.024) | 21 |
| 7. Concrete pipe, uniform flow (0.012) | 42 |
| 8. Other waterways and pipe | 0.508/n |
| **Channel Flow (Continuous stream, R = 0.4)** | **$k_c$** |
| 9. Meandering stream with some pools (n = 0.040) | 20 |
| 10. Rock-lined stream (n = 0.035) | 23 |
| 11. Grass-lined stream (n = 0.030) | 27 |
| 12. Other streams, man-made channels and pipe | 0.807/n |

[1] See TR-55, 1986

[2] 210-VI-TR-55, Second Ed., June 1986

**Table D.3- 4 "n" and "k" Values for Hydrographs**

## D.4 Pipes, Culverts and Open Channels

***Additional Requirements for the City of Auburn***

This section presents the methods, criteria and details for analysis and design of pipe systems, culverts, and open channel conveyance systems.

Storm drainage conveyance for public street requirements are as follows:

- Maximum surface run without considering curve super elevation (gutter flow) between catch basins on paved roadway surfaces shall be as follows:

| Pavement Slope, % | Maximum Flow Length, ft |
|---|---|
| 0.5 – 1 | 200 |
| 1 to 6 | 300 |
| 6 to 10 | 200 |

- Refer to Chapter 6 Storm Drainage Facilities and Chapter 10 Streets of the City of Auburn Design Standards for more requirements related to drainage conveyance located in public street right-of-way.

### *D.4.1 Pipe Systems*

Pipe systems are networks of storm drain pipes, catch basins, manholes, inlets, and outfalls, designed and constructed to convey surface water. The hydraulic analysis of flow in storm drainage pipes typically is limited to gravity flow; however in analyzing existing systems it may be necessary to address pressurized conditions. A properly designed pipe system will maximize hydraulic efficiency by utilizing proper material, slope, and pipe size.

#### *D.4.1.1 Design Flows*

Design flows for sizing or assessing the capacity of pipe systems shall be determined using the hydrologic analysis methods described in this appendix. Approved single event models described in Chapter 2, Volume III of the SWMMWW may also be used to determine design flows for pipe systems. The design event is described above in Section D.2, Appendix D of the COA Supplemental Manual. Pipe systems shall be designed to convey the design event without surcharging (water depth in pipe shall not exceed 90% of the pipe diameter).

#### *D.4.1.2 Conveyance Capacity*

Two methods of hydraulic analysis using Manning's Equation are required by the City for the analysis of pipe systems. First, the **Uniform Flow Analysis** method is used for preliminary design and analysis of pipe systems. Second, the **Backwater Analysis** method is used to analyze both proposed and existing pipe systems to verify adequate capacity. See Section D.2, Appendix D of the COA Supplemental Manual for the required design events for pipe systems.

*Uniform Flow Analysis*

This method is typically used for preliminary sizing of new pipe systems to convey the design flow as calculated from the required design.

Assumptions:

- Flow is uniform in each pipe (i.e., depth and velocity remain constant throughout the pipe for a given flow).
- Friction head loss in the pipe barrel alone controls capacity. Other head losses (e.g., entrance, exit, junction, etc.) and any backwater effects or inlet control conditions are not specifically addressed.
- All pipes shall be modeled as if no on-site detention is provided up-stream.
- All pipes shall be designed for fully developed conditions. The fully developed conditions shall be derived from the percentages of impervious area provided in Table D.4- 1 Percentage Impervious for Modeling Fully Developed Conditions below.

| **Land Use Description**[1] | **% Impervious** |
|---|---|
| Commercial/Industrial | 85 |
| Residential | 65 |

[1] For the land use descriptions, roads are included in the percentage impervious.

**Table D.4- 1 Percentage Impervious for Modeling Fully Developed Conditions**

Each pipe within the system shall be sized and sloped such that **its barrel capacity at normal full flow** is equal to or greater than the design flow calculated from the appropriate design storm as identified in Section D.2. The nomographs in Figure D.4- 1 Pipe Sizing Nomograph below can be used for approximate sizing of the pipes or Manning's Equation can be solved for pipe size directly:

$$V = \frac{1.49}{n} R^{2/3} S^{1/2}$$ (equation 7)

or use the continuity equation, $Q = A \bullet V$, such that

$$Q = \frac{1.49}{n} A R^{2/3} S^{1/2}$$ (equation 8)

Where $Q$ = discharge (cfs)

$V$ = velocity (fps)

$A$ = area (sf)

$n$ = Manning's roughness coefficient; see Table D.4- 2 Manning's "n" Values for Pipes

$R$ = hydraulic radius = area/wetted perimeter

$S$ = slope of the energy grade line (ft/ft)

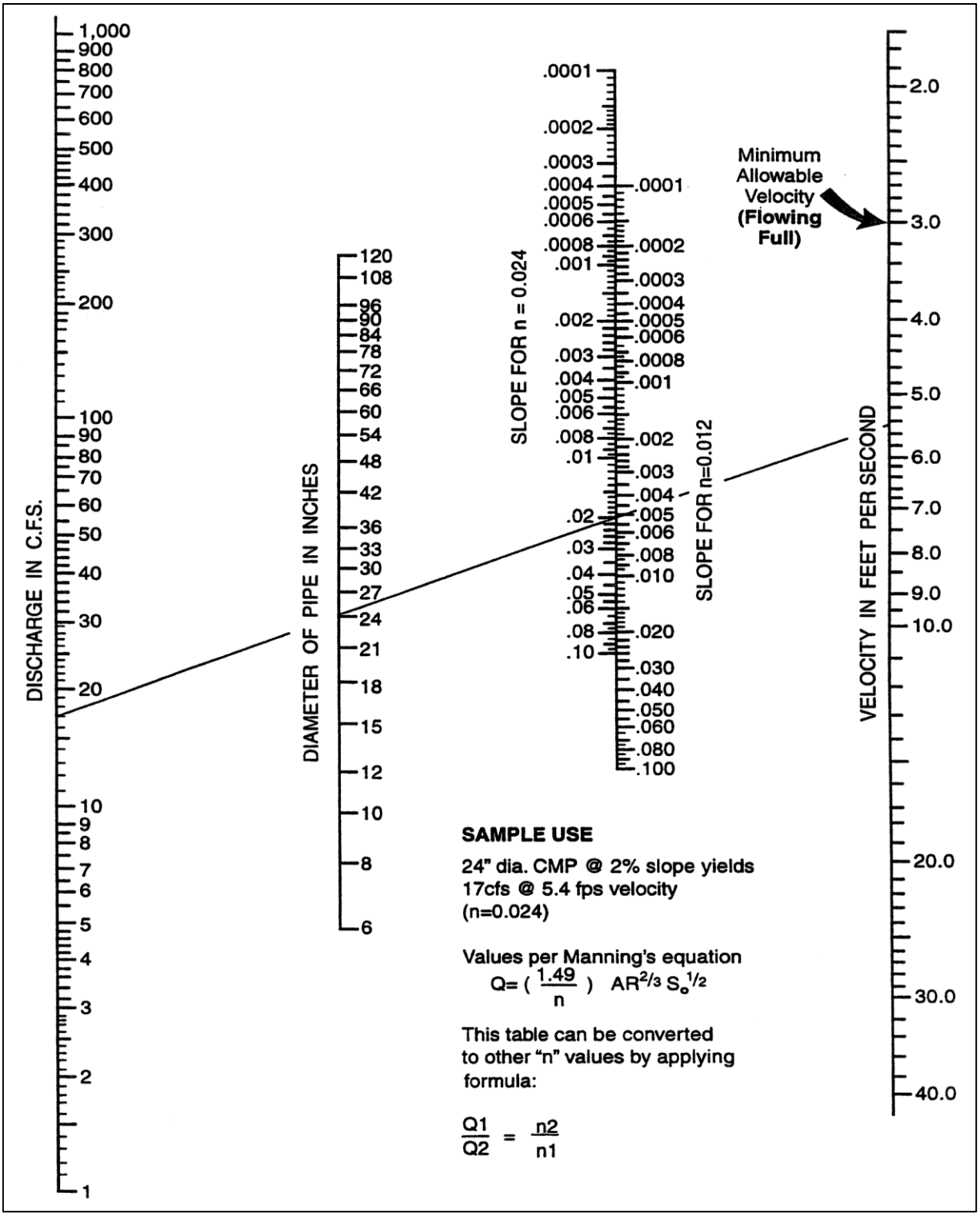


**Figure D.4- 1 Pipe Sizing Nomograph**

| Type of Pipe Material | | Analysis Method | |
|---|---|---|---|
| | | **Backwater Flow** | **Manning's Equation Flow** |
| A. | Concrete pipe and CPEP-smooth interior pipe | 0.012 | 0.014 |
| B. | Annular Corrugated Metal Pipe or Pipe Arch: | | |
| | 1. 2-2/3" x 1/2" corrugation (riveted) | | |
| | a. plain or fully coated | 0.024 | 0.028 |
| | b. paved invert (40% of circumference paved): | | |
| | (1) flow full depth | 0.018 | 0.021 |
| | (2) flow 0.8 depth | 0.016 | 0.018 |
| | (3) flow 0.6 depth | 0.013 | 0.015 |
| | c. treatment | 0.013 | 0.015 |
| | 2. 3" x 1" corrugation | 0.027 | 0.031 |
| | 3.6" x 2" corrugation (field bolted) | 0.030 | 0.035 |
| C. | Helical 2-2/3" x 1/2" corrugation and CPEP-single wall | 0.024 | 0.028 |
| D. | Spiral rib metal pipe and PVC pipe | 0.011 | 0.013 |
| E. | Ductile iron pipe cement lined | 0.012 | 0.014 |
| F. | High density polyethylene pipe (butt fused only) | 0.009 | 0.009 |

**Table D.4- 2 Manning's "n" Values for Pipes**

Table D.4- 2 Manning's "n" Values for Pipes above provides the recommended Manning's "n" values for preliminary design for pipe systems. The "n" values for this method are 15% higher in order to account for entrance, exit, junction, and bend head losses.

For **pipes flowing partially full**, the actual velocity may be estimated from the hydraulic properties shown below in Figure D.4- 2 Circular Channel Ratios by calculating $Q_{full}$ and $V_{full}$ and using the ratio of $Q_{design}/Q_{full}$ to find $V$ and $d$ (depth of flow).

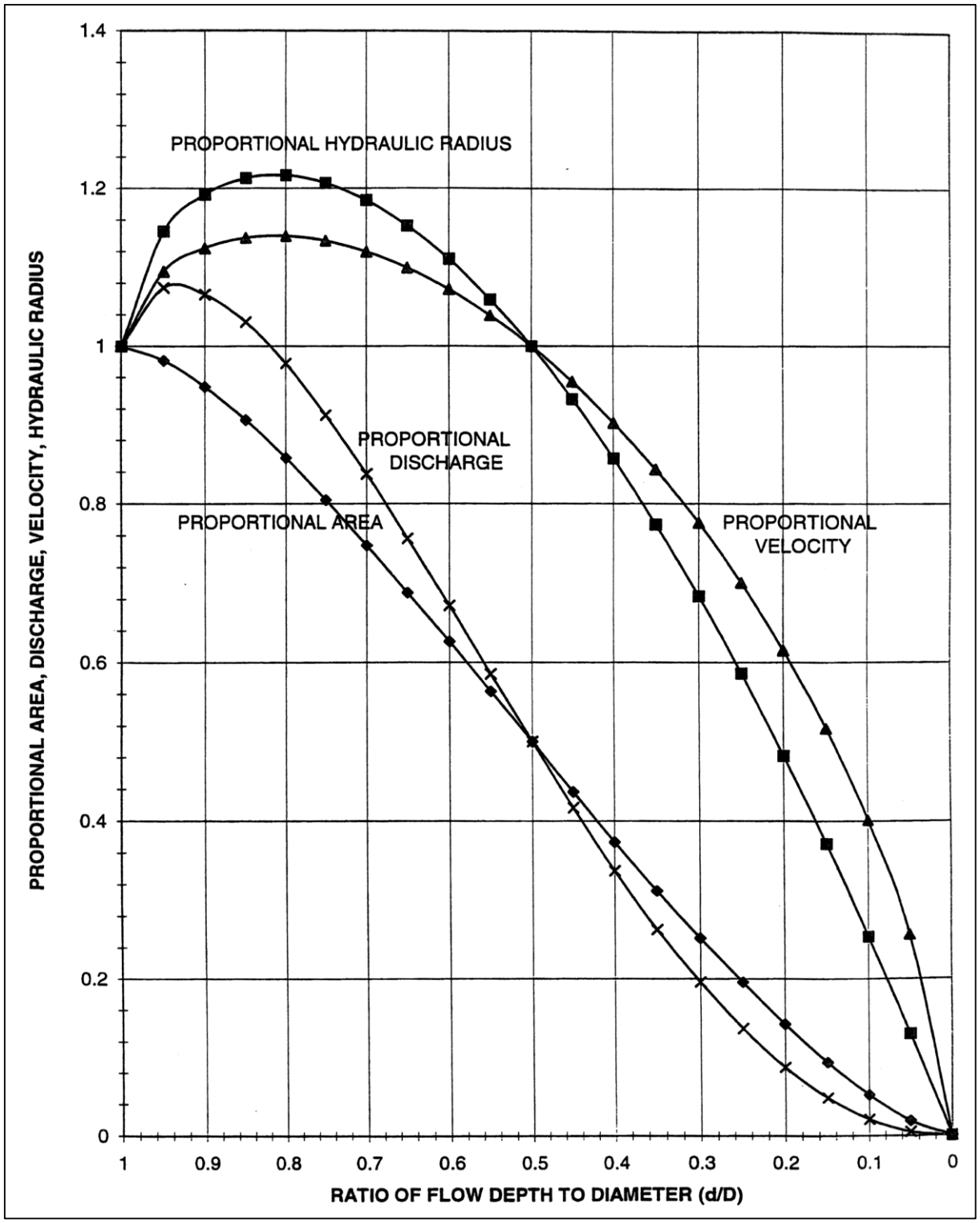


**Figure D.4- 2 Circular Channel Ratios**

*D.4.1.3 Backwater Analysis*

A backwater analysis shall be required when the design depth of flow is greater than 90% of the pipe inside diameter or as directed by the City. The backwater analysis method described in this section is used to analyze the capacity of both proposed and existing pipe systems to convey the required design flow (i.e., either the 10-year or 25-year peak flow as required in Section D.2). The backwater analysis shall verify that the pipe system meets the following conditions:

- For the 25-year event, there shall be a minimum of 0.5 feet of freeboard between the water surface and the top of any manhole or catch basin.
- For the 100-year event, overtopping of the pipe conveyance system may occur, however, the additional flow shall not extend beyond half the lane width of the outside lane of the traveled way and shall not exceed 4 inches in depth at its deepest point. Refer to the Washington State Department of Transportation (WSDOT) Hydraulics Manual for pavement drainage calculations. Off-channel storage on private property is allowed with recording of the proper easements. When this occurs, the additional flow over the ground surface is analyzed using the methods for open channels described in Sections D.2 and D.4.3 and added to the flow capacity of the pipe system.

This method is used to compute a simple backwater profile (hydraulic grade line) through a proposed or existing pipe system for the purposes of verifying adequate capacity. It incorporates a re-arranged form of Manning's equation expressed in terms of friction slope (slope of the energy grade line in ft/ft). The friction slope is used to determine the head loss in each pipe segment due to barrel friction, which can then be combined with other head losses to obtain water surface elevation at all structures along the pipe system.

The backwater analysis begins at the downstream end of the pipe system and is computed back through each pipe segment and structure upstream. The friction, entrance, and exit head losses computed for each pipe segment are added to that segment's tailwater elevation (the water surface elevation at the pipes' outlet) to obtain its outlet control headwater elevation. This elevation is then compared with the inlet control headwater elevation, computed assuming the pipe's inlet alone is controlling capacity using the methods for inlet control presented in Section D.4.2. The condition that creates the highest headwater elevation determines the pipe's capacity. The approach velocity head is then subtracted from controlling headwater elevation, and the junction and bend head losses are added to compute the total headwater elevation, which is then used as the tailwater elevation for the upstream pipe segment.

The Backwater Calculation Sheet in Figure D.4- 3 Backwater Calculation Sheet can be used to compile the head losses and headwater elevations for each pipe segment. The numbered columns on this sheet are described in Table D.4- 3 Backwater Calculation Sheet Notes. An example calculation is performed in

Figure D.4- 6 Backwater Pipe Calculation Example. This method should not be used to compute stage/discharge curves for level pool routing purposes.

| Pipe Segment CB to CB | (1) Q (cfs) | (2) Lngth (ft) | (3) Pipe Size | (4) "n" Value | (5) Outlet Elev (ft) | (6) Inlet Elev (ft) | (7) Barrel Area (sq. ft) | (8) Barrel Vel (fps) | (9) Barrel Vel Head (ft) | (10) TW Elev (ft) | (11) Fric-tion Loss (ft) | (12) Entr HGL Elev (ft) | (13) Entr Head Loss (ft) | (14) Exit Head Loss (ft) | (15) Outlt Cntrl Elev (ft) | (16) Inlet Cntrl Elev (ft) | (17) Appr Vel Head (ft) | (18) Bend Head Loss (ft) | (19) Junc Head Loss (ft) | (20) HW Elev (ft) |
|---|---|---|---|---|---|---|---|---|---|---|---|---|---|---|---|---|---|---|---|---|
| | | | | | | | | | | | | | | | | | | | | |
| | | | | | | | | | | | | | | | | | | | | |
| | | | | | | | | | | | | | | | | | | | | |
| | | | | | | | | | | | | | | | | | | | | |
| | | | | | | | | | | | | | | | | | | | | |
| | | | | | | | | | | | | | | | | | | | | |
| | | | | | | | | | | | | | | | | | | | | |
| | | | | | | | | | | | | | | | | | | | | |
| | | | | | | | | | | | | | | | | | | | | |
| | | | | | | | | | | | | | | | | | | | | |
| | | | | | | | | | | | | | | | | | | | | |
| | | | | | | | | | | | | | | | | | | | | |
| | | | | | | | | | | | | | | | | | | | | |
| | | | | | | | | | | | | | | | | | | | | |
| | | | | | | | | | | | | | | | | | | | | |
| | | | | | | | | | | | | | | | | | | | | |
| | | | | | | | | | | | | | | | | | | | | |
| | | | | | | | | | | | | | | | | | | | | |
| | | | | | | | | | | | | | | | | | | | | |

**Figure D.4- 3 Backwater Calculation Sheet**

| Column | Description |
|---|---|
| (1) | Design flow to be conveyed by pipe segment. |
| (2) | Length of pipe segment. |
| (3) | Pipe size: indicate pipe diameter or span % rise. |
| (4) | Manning's *"n"* value. |
| (5) | Outlet Elevation of pipe segment. |
| (6) | Inlet Elevation of pipe segment. |
| (7) | Barrel Area: this is the full cross-sectional area of the pipe. |
| (8) | Barrel Velocity: this is the full velocity in the pipe as determined by:<br><br>$V = Q/A$ or Col. (8) = Col. (1)/Col. (7) |
| (9) | Barrel Velocity Head = $V^3/2g$ or $(\text{Col. (8)})^2/2g$;<br><br>Where g = 32.2 ft./sec.$^2$ (acceleration due to gravity) |
| (10) | Tailwater (*TW*) Elevation: this is the water surface elevation at the outlet of the pipe segment. If the pipe's outlet is not submerged by the TW and the TW depth is less than $D+d_c)/2$, set TW equal to $D+d_c)/2$ to keep the analysis simple and still obtain reasonable results ($D$=pipe barrel height and $d_c$=critical depth, both in feet. See Figure D.4- 4 Critical Depth of Flow for Circular Culverts for determination of $d_c$. |
| (11) | Friction Loss = $S_f \times L$ (or $S_f$ X Col (2));<br><br>Where $S_f$ is the friction slope or head loss per linear foot of pipe as determined by Manning's equation expressed in the form: $S_f = (nV)^{2/}2.22R^{1.33}$ |
| (12) | Hydraulic Grade Line (HGL) Elevation just inside the entrance of the pipe barrel; this is determined by adding the friction loss to the TW elevation: Col. (12) = Col. (11) + (Col. (10)<br><br>If this elevation falls below the pipe's inlet crown, it no longer represents the true HGL when computed in this manner. The true HGL will fall somewhere between the pipe's crown and either normal flow depth or critical flow depth, whichever is greater. To keep the analysis simple and still obtain reasonable results (i.e. erring on the conservative side), set the HGL elevation equal to the crown elevation. |
| (13) | Entrance Head Loss = $K_e/2g$ (or $K_e$ x Col (9)) |

| | |
|---|---|
| | Where $K_e$ = Entrance Loss Coefficient from Table D.4- 7 Entrance Loss Coefficients This is the head lost due to flow contractions at the pipe entrance. |
| (14) | Exit Head Loss = 1.0 x $V^2/2g$ or 1.0 x Col. (9);<br><br>This is the velocity head lost or transferred downstream. |
| (15) | Outdoor Control Elevation = Col. (12) + Col. (13) + Col. (14)<br>This is the maximum headwater elevation assuming the pipe's barrel and inlet/outlet characteristics are controlling capacity. It does not include structure losses or approach velocity considerations. |
| (16) | Inlet Control Elevation (see Section D.4.2.5 for computation of inlet control on culverts); this is the maximum headwater elevation assuming the pipe's inlet is controlling capacity. It does not include structure losses or approach velocity considerations. |
| (17) | Approach Velocity Head: This is the amount of head/energy being supplied by the discharge from an upstream pipe or channel section, which serves to reduce the headwater elevation. If the discharge is from a pipe, the approach velocity head is equal to the barrel velocity head computed for the upstream pipe. If the upstream pipe outlet is significantly higher in elevation (as in a drop manhole) or lower in elevation such that its discharge energy would be dissipated, an approach velocity head of zero should be assumed. |
| (18) | Bend Head Loss = $K_b$ x $V^2/2g$ (or $K_b$ x Col. (17));<br><br>Where $K_b$ = Bend Loss Coefficient (from Figure D.4- 11 Head for Culverts (Pipe W/"N"=0.024) Flowing Full with Outlet Control). This is due to loss of head/energy required to change direction of flow in an access structure. |
| (19) | Junction Head Loss: This is the loss in head/energy which results from the turbulence created when two or more streams are merged into one within the access structure. Figure D.4- 5 Junction Head Loss in Structures can be used to determine this loss, or it can be computed using the following equations derived from Figure D.4- 5:<br><br>Junction Head Loss = $K_j$ x $V^2/2g$ (or $K_j$ x Col. (17)<br>where $K_j$ is the Junction Loss Coefficient determined by:<br>$K_j = (Q^3/Q^1)/(1.18 + 0.63(Q^3/Q^1))$ |
| (20) | Headwater (HW) Elevation: This is determined by combining the energy heads in Columns 17, 18, and 19 with the highest control elevation in either Column 15 or 16, as follows:<br><br>Col. (20) = Col. (15 or 16) – Col. (17) + Col. (18) + Col. (19) |

**Table D.4- 3 Backwater Calculation Sheet Notes**

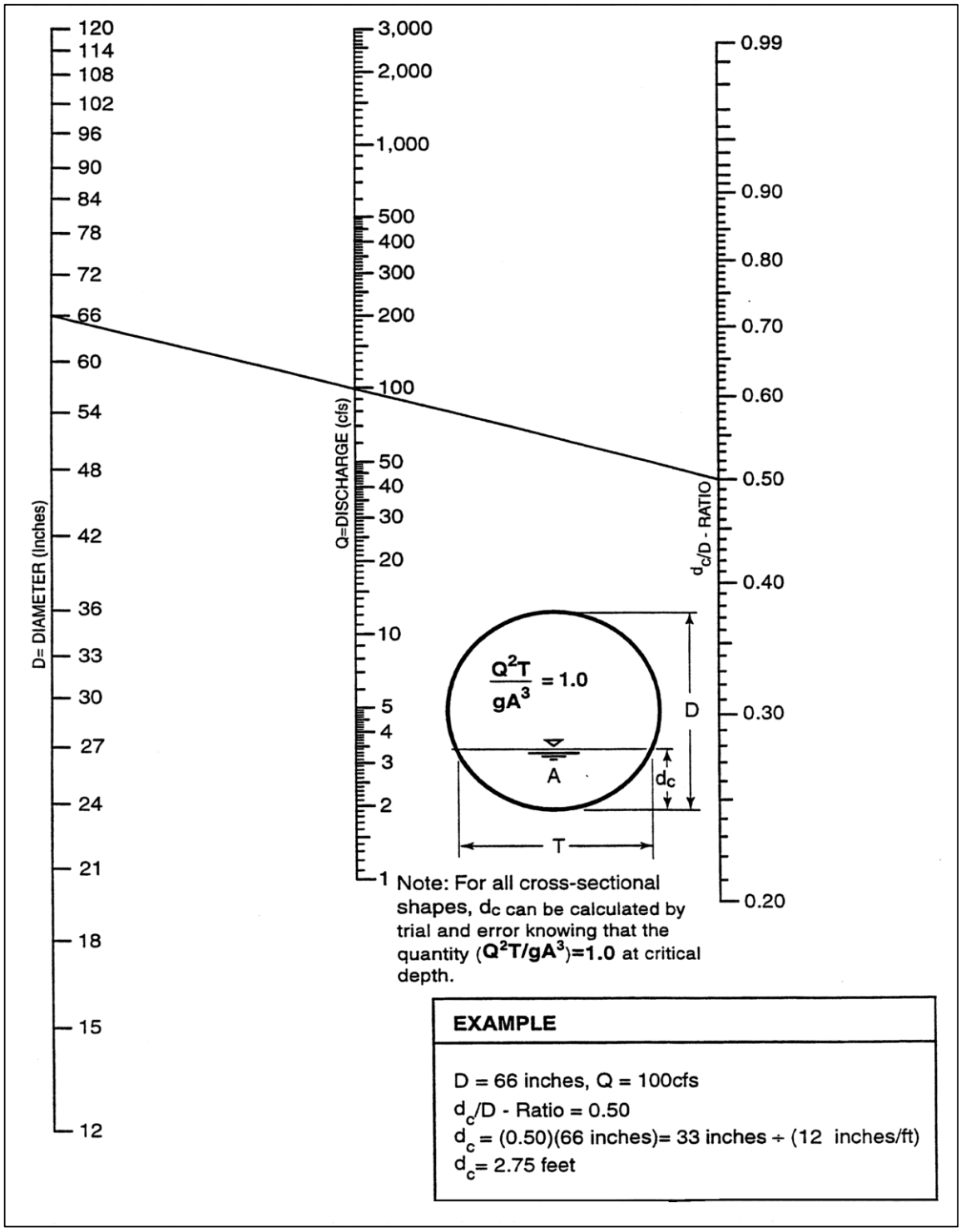


**Figure D.4- 4 Critical Depth of Flow for Circular Culverts**

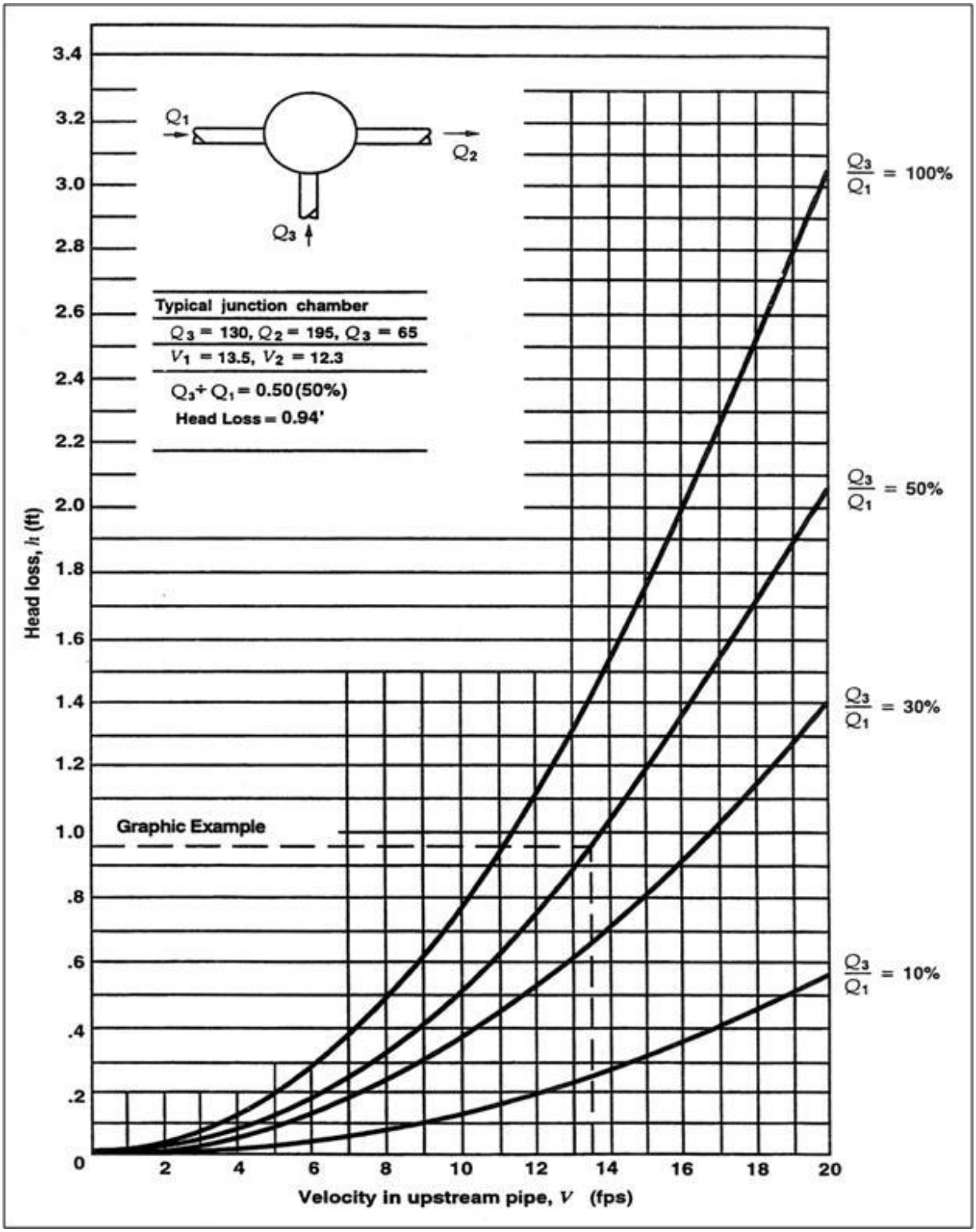


**Figure D.4- 5 Junction Head Loss in Structures**

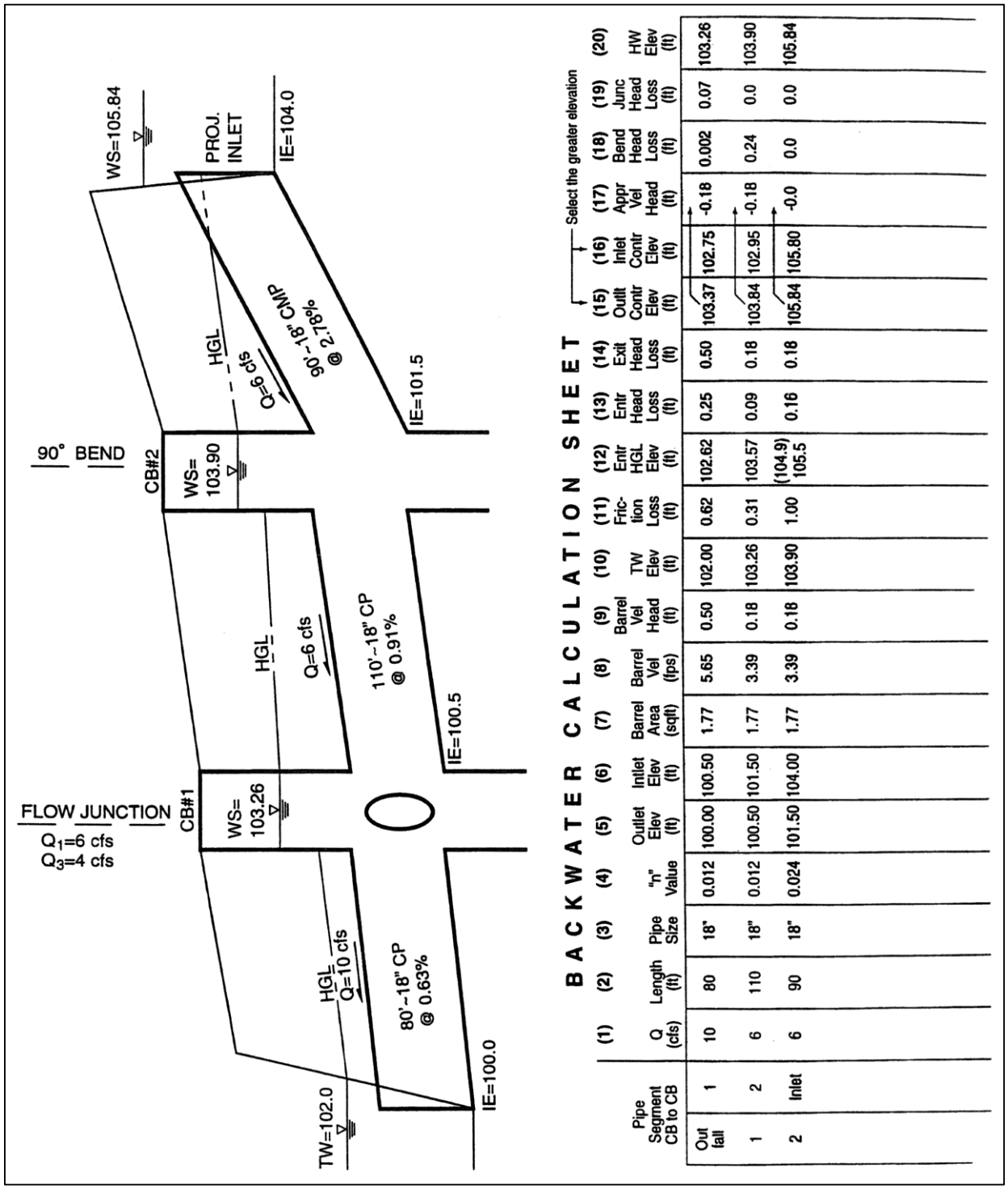


BACKWATER CALCULATION SHEET

Select the greater elevation

| Pipe Segment CB to CB | (1) Q (cfs) | (2) Length (ft) | (3) Pipe Size | (4) "n" Value | (5) Outlet Elev (ft) | (6) Inlet Elev (ft) | (7) Barrel Area (sqft) | (8) Barrel Vel (fps) | (9) Barrel Vel Head (ft) | (10) TW Elev (ft) | (11) Fric-tion Loss (ft) | (12) Entr HGL Elev (ft) | (13) Entr Head Loss (ft) | (14) Exit Head Loss (ft) | (15) Outlt Contr Elev (ft) | (16) Inlet Contr Elev (ft) | (17) Appr Vel Head (ft) | (18) Bend Head Loss (ft) | (19) Junc Head Loss (ft) | (20) HW Elev (ft) |
|---|---|---|---|---|---|---|---|---|---|---|---|---|---|---|---|---|---|---|---|---|
| Out fall | 10 | 80 | 18" | 0.012 | 100.00 | 100.50 | 1.77 | 5.65 | 0.50 | 102.00 | 0.62 | 102.62 | 0.25 | 0.50 | 103.37 | 102.75 | -0.18 | 0.002 | 0.07 | 103.26 |
| 1 | 6 | 110 | 18" | 0.012 | 100.50 | 101.50 | 1.77 | 3.39 | 0.18 | 103.26 | 0.31 | 103.57 | 0.09 | 0.18 | 103.84 | 102.95 | -0.18 | 0.24 | 0.0 | 103.90 |
| 2 | 6 | 90 | 18" | 0.024 | 101.50 | 104.00 | 1.77 | 3.39 | 0.18 | 103.90 | 1.00 | (104.9) 105.5 | 0.16 | 0.18 | 105.84 | 105.80 | -0.0 | 0.0 | 0.0 | 105.84 |
| Inlet | | | | | | | | | | | | | | | | | | | | |

**Figure D.4- 6 Backwater Pipe Calculation Example**

*D.4.1.4 Inlet Grate Capacity*

The *Washington State Department of Transportation (WSDOT) Hydraulics Manual* can be used in determining the capacity of inlet grates when capacity is of concern. When verifying capacity, assume:

- Grate areas on slopes are 80 percent free of debris, and "vaned" grates are 95 percent free.
- Grate areas in sags or low spots are 50 percent free of debris, and "vaned" grates, 75 percent free.

*D.4.1.5 Pipe Materials*

See City of Auburn Engineering Construction Standards, Division 7, for pipe specifications.

*D.4.1.6 Pipe Sizes*

- The following pipe sizes shall be used for pipe systems to be maintained by the City: 12-inch, 15-inch, 18-inch, 21-inch, 24-inch, 30-inch, 36-inch and 42-inch.
- Pipes smaller than 12-inch may only be used for privately maintained systems, or as approved in writing by the City.
- Catch basin leads shall be a minimum of 12-inch.
- Single-family home site roof, foundation and driveway drains may use pipe as small as 4 inch.
- Non-single family roof, foundation and small driveway drains may use pipe as small as 6-inch. Pipes under 10-inch may require capacity analysis if requested by the City.
- For pipes larger than 30-inch increasing increments of 6-inch intervals shall be used (36-inch, 42-inch, 48-inch, etc.).

*D.4.1.7 Changes in Pipe Sizes*

- Pipe direction changes or size increases or decreases are only allowed at manholes and catch basins.
- Where a minimal fall is necessary between inlet and outlet pipes in a structure, pipes must be aligned vertically by one of the following in order of preference:
    - Match pipe crowns
    - Match 80% diameters of pipes
    - Match pipe inverts or use City approved drop inlet connection

*D.4.1.8 Pipe Alignment and Depth*

- Pipes must be laid true to line and grade with no curves, bends, or deflections in any direction.
    - ***Exception:*** *Vertical deflections in HDPE and ductile iron pipe with flanged restrained mechanical joint bends (not greater than 30%) on steep slopes are allowed provided the pipe adequately drains, with a minimum velocity of 2 feet per second (fps).*
- A break in grade or alignment or changes in pipe material shall occur only at catch basins or manholes.
- For the standard main alignment refer to the City's Engineering Design and Construction Standards.
- The standard depth for new mains measures six (6) feet from the center of the pipe to the main street surface.
- The project engineer shall consult with the City for the potential of a future extension of the storm system. In this case, the City may require modifications to the depth or alignment.
- Connections to the main shall be at 90°. Slight variations may be allowed.
- Pipes shall be allowed to cross under retaining walls as specifically approved in writing by the City when no other reasonable alternatives exist.

*D.4.1.9 Pipe Slopes and Velocities*

- The slope of the pipe shall be set so that a minimum velocity of 2 feet per second can be maintained at full flow.
- A minimum slope for all pipes shall be 0.5% (under certain circumstances, a minimum slope of 0.3% may be allowed with prior approval in writing from the City).
- Maximum slopes, velocities, and anchor spacings are shown in Table D.4- 4 Maximum Pipe Slopes, Velocities, and Anchor Requirements below. If velocities exceed 15 feet per second for the conveyance system design event described in Section D.2, provide anchors and/or restrained joints at bends and junctions.

*D.4.1.10 Pipes on Steep Slopes*

- Slopes 20% or greater shall require all drainage to be piped from the top to the bottom in High Density Polyethylene (HDPE) pipe (butt-fused) or ductile iron pipe welded or mechanically restrained. Additional anchoring design is required for these pipes.
- Above-ground installation is required on slopes greater than 40% to minimize disturbance to steep slopes, unless otherwise approved in writing by the City.
- HDPE pipe systems longer than 100 feet must be anchored at the upstream end if the slope exceeds 20% or as required by the City.
- Above ground installations of HDPE shall address the high thermal expansion/contraction coefficient of the pipe material. An analysis shall be completed to demonstrate that the system as designed will tolerate the thermal expansion of the pipe material.

| Pipe Material | Pipe Slope Above Which Pipe Anchors Required and Minimum Anchor Spacing | Max. Slope Allowed | Max. Velocity @ Full Flow |
|---|---|---|---|
| Spiral Rib[1], PVC[1] | 20% (1 anchor per 100 L.F. of pipe) | 30%(3) | 30 fps |
| Concrete[1] | 10% (1 anchor per 50 L.F. of pipe) | 20%(3) | 30 fps |
| Ductile Iron[4] | 40% (1 anchor per pipe section) | None | None |
| HDPE[2] | 50% (1 anchor per 100 L.F. of pipe – cross slope installations may be allowed with additional anchoring and analysis) | None | None |

[1]Not allowed in landslide hazard areas.
[2]Butt-fused pipe joints required. Above-ground installation is required on slopes greater than 40% to minimize disturbance to steep slopes.
[3]Maximum slope of 20% allowed for these pipe materials with no joints (one section) if structures are provided at each end and the pipes are property grouted or otherwise restrained to the structures.
[4]Restrained joints required on slopes greater than 25%. Above-ground installation is required on slopes greater than 40% to minimize disturbance to steep slopes.

**Table D.4- 4 Maximum Pipe Slopes, Velocities, and Anchor Requirements**

*D.4.1.11 Structures*

For the purposes of this Manual, all catch basins and manholes shall meet WSDOT standards such as Type 1L, Type 1, and Type 2. Table D.4- 5 Allowable Structures and Pipe Sizes below presents the structures and pipe sizes allowed by size of structure.

| Catch Basin Type[1] | Maximum Inside Pipe Diameter | |
|---|---|---|
| | CMP)[(5)], Spiral Rib)[5], CPEP (single wall)[5], HDPP, Ductile Iron, PVC [2] (Inches) | Concrete, CPEP (smooth interior), (Inches) |
| Inlet [4] | 12 | 12 |
| Type 1 [3] | 15 | 12 |
| Type IL [3] | 21 | 18 |
| Type 2 - 48-inch dia. | 30 | 24 |
| Type 2 - 54-inch dia. | 36 | 30 |
| Type 2 – 60-inch dia. | 42 | 36 |
| Type 2 - 72-inch dia. | 54 | 42 |
| Type 2 - 96-inch dia. | 72 | 60 |

[1]Catch basins (including manhole steps, ladder, and handholds) shall conform to the W.S.D.O.T. Standard Plans or an approved equal based upon submittal for approval.
[2]Maintain the minimum sidewall thickness per this Section.
[3]Maximum 5 vertical feet allowed between grate and invert elevation.
[4]Normally allowed only for use in privately maintained drainage systems and must discharge to a catch basin immediately downstream.
[5]Allowed for private system installations only.

**Table D.4- 5 Allowable Structures and Pipe Sizes**

The following criteria shall be used when designing a conveyance system that utilizes catch basins or manholes:

- Catch basin (or manhole) diameter shall be determined by pipe diameter and orientation at the junction structure. A plan view of the junction structure, drawn to scale, will be required when more than four pipes enter the structure on the same plane, or if angles of approach and clearance between pipes is of concern. The plan view (and sections if necessary) must insure a minimum distance (of solid concrete wall) between pipe openings of 8 inches for 48-inch and 54-inch diameter catch basins and 12 inches for 72-inch and 96-inch diameter catch basins
- Type 1 catch basins should be used when overall catch basin height does not exceed eight (8) feet or when the invert depth does not exceed five (5) feet below rim.
- Type 1L catch basins should be used for the following situations:

    - When overall catch basin height does not exceed eight (8) feet or when invert depth does not exceed five (5) feet below rim.
    - When any pipes tying into the structure exceed 21 inches connecting to the long side, or 18 inches connecting to the short side at or very near to right angles.
- Type 2 (48-inch minimum diameter) catch basins or manholes shall be used at the following locations or for the following situations:
    - When overall structure height exceed 8 feet.
    - When all pipes tying into the structure exceed the limits set for Type 1 structures. Type 2 catch basins or manholes over 4 feet in height shall have standard ladders.
- The maximum slope of ground surface for a radius of 5 feet around a catch basin grate shall be 3:1. The preferred slope is 5:1 to facilitate maintenance access.
- Catch basin (or manhole) evaluation of structural integrity for H-20 loading will be required for multiple junction catch basins and other structures that exceed the recommendations of the manufacturers. The City may require further review for determining structural integrity.
- Catch basins leads shall be no longer than 50 feet.
- Catch basins shall not be installed in graveled areas or sediment generating areas.
- Catch basins shall be located:
    - At the low point of any sag vertical curve or grade break where the grade of roadway transitions from a negative to a positive grade.
    - Prior to any intersection such that a minimal amount of water flows across the intersection, through a curb ramp, or around a street return.
    - Prior to transitions from a typical crown to a full warp through a downhill grade.
- Catch basins shall not be placed in areas of expected pedestrian traffic. The engineer shall avoid placing a catch basin in crosswalks, adjacent to curb ramps, or in the gutter of a driveway. Care shall be taken on the part of the engineer to assure that the catch basin will not be in conflict with any existing or proposed utilities.
- Connections to structures and mains shall be at 90°. Slight variations may be allowed.
- The maximum surface run between structures shall not exceed 400 linear feet.
- Changes in pipe direction, or increases or decreases in size, shall only be allowed at structures.
- For pipe slope less than the required minimum, distance between structures shall be decreased to 200 linear feet.
- For Type 1 and 1L, catch basin to catch basin connections shall not be allowed.
- Bubble up systems shall not be allowed.

*D.4.1.12 Pipe Clearances*

*Horizontal*

A minimum of 5 feet horizontal separation shall be maintained between the storm main and all water or sanitary sewer mains. This shall also apply to laterals.

*Vertical*

Where crossing an existing or proposed utility or sanitary sewer main, the alignment of the storm system shall be such that the two systems cross as close to perpendicular as possible. Where crossing a sanitary sewer main, provide a minimum 12 inches of vertical separation. For crossings of water mains refer to the City Engineering Design and Construction Standards. The minimum vertical separation for a storm main crossing any other utility shall be 6 inches. *Note: Where the vertical separation of two parallel systems exceeds the horizontal separation, additional horizontal separation may be required to provide future access to the deeper system.*

*D.4.1.13 Pipe Cover*

- Suitable pipe cover over storm pipes in road rights-of-way shall be calculated for H-20 loading by the Project Engineer. Pipe cover is measured from the finished grade elevation down to the top of the outside surface of the pipe. Pipe manufacturer's recommendations are acceptable if verified by the Project Engineer.
- PVC (ASTM D3034 - SDR 35) minimum cover shall be three feet in areas subject to vehicular traffic; maximum cover shall be 30 feet or per the manufacturer's recommendations and as verified with calculations from the Project Engineer.
- Cover for ductile iron pipe may be reduced to a 1-foot minimum as long as it is not within the structural pavement of the roadway surfacing. Use of reinforced concrete pipe or AWWA C900 PVC pipe in this situation requires the engineer to provide verifying calculations to confirm the adequacy of the selected pipe's strength for the burial condition.
- Pipe cover in areas not subject to vehicular loads, such as landscape planters and yards, may be reduced to a 1-foot minimum.
- Catch basin evaluation of structural integrity for H-20 loading will be required for multiple junction catch basins and other structures that exceed the recommendations of the manufacturers.

*D.4.1.14 System Connections*

Connections to a pipe system shall be made only at catch basins or manholes.

Connections to structures and mains shall be at 90°. Slight variations may be allowed.

Minimum fall through manhole structures shall be 0.1 foot. Pipes of different diameters shall be aligned vertically in manholes by one of the following methods, listed in order of preference:

1. Match pipe crowns
2. Match 80% diameters of pipes.
3. Match pipe inverts or use City approved drop inlet connection.

Drop connections shall be considered on a case by case basis.

Private connections to the City storm system shall be at a drainage structure (i.e. catch basin or manhole) and only if sufficient capacity exists. Tee connections into the side of a pipe shall not be permitted.

Roof downspouts may be infiltrated or dispersed in accordance with the provisions of the SWMMWW Volume III, Chapter 3.1. Infiltration and dispersion shall be evaluated first. If infiltration and dispersion are not feasible, roof drains may be discharged through the curb for residential projects per Section 3.1, Volume III of the COA Supplemental Manual into the roadway gutter or connected into a drainage structure. Roof downspouts may **not** be connected directly into the side of a storm drainage pipe.

*D.4.1.15 Debris Barriers*

Access barriers are required on all pipes 12 inches and larger exiting a closed pipe system. Debris barriers (trash racks) are required on all pipes entering a pipe system. See Figure D.4- 7 Debris Barriers for required debris barriers on pipe ends outside of roadways and for requirements on pipe ends (culverts) projecting from driveways or roadway side slopes.

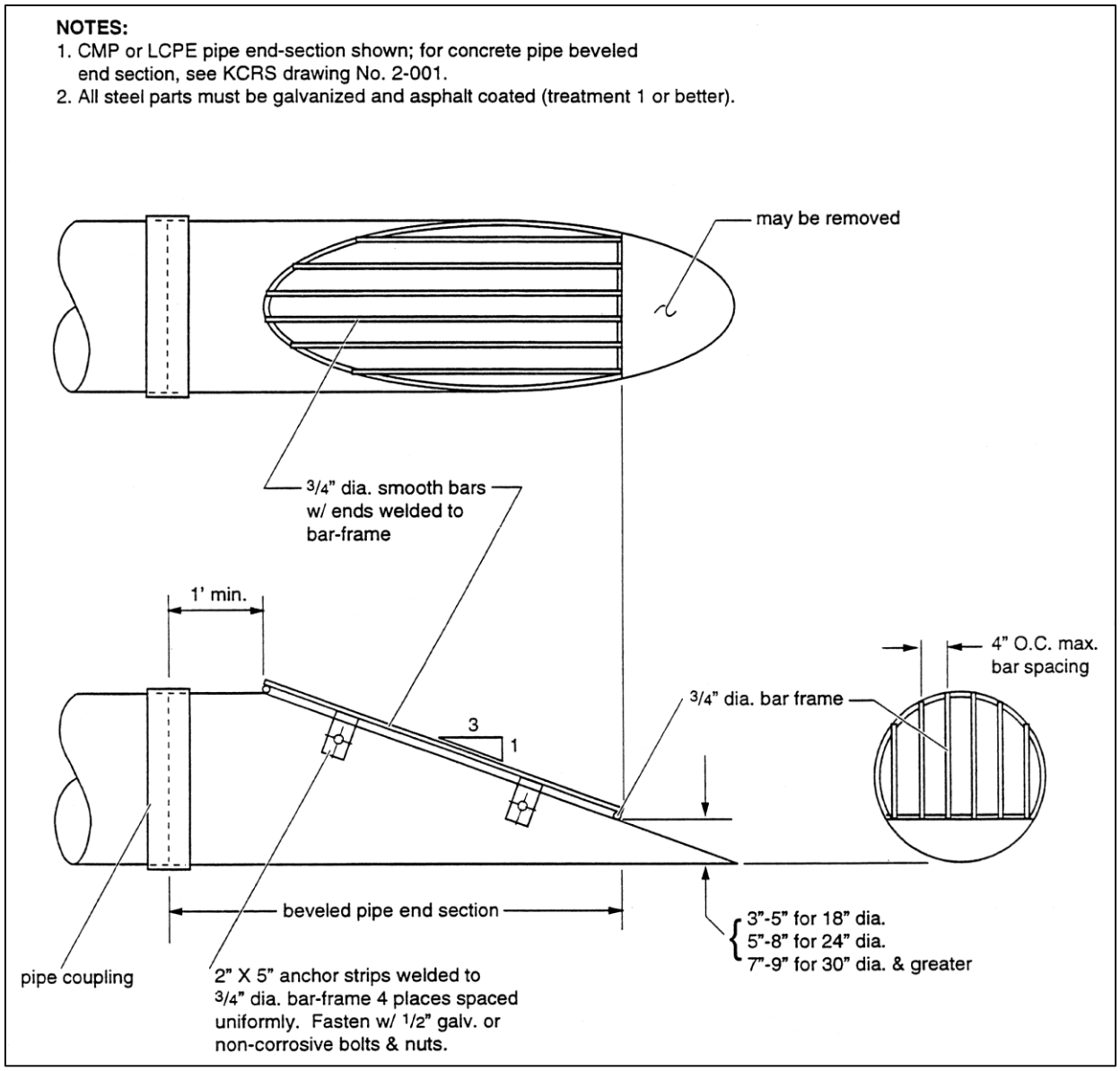


**Figure D.4- 7 Debris Barriers**

*D.4.2 Culverts*

Culverts are relatively short segments of pipe of circular, elliptical, rectangular, or arch cross section and typically convey flow under road embankments or driveways. Culverts installed in streams and natural drainages shall meet the City's Critical Areas Code and *any fish passage requirements of the Washington State Department of Fish and Wildlife.*

*D.4.2.1 Design Event*

The design event for culverts is given in Section D.2.

*D.4.2.2 Design Flows*

Design flows for sizing or assessing the capacity of culverts shall be determined using the hydrologic analysis methods described in this appendix.

Other single event models as described in Chapter 2, Volume III of the SWMMWW may be used to determine design flows. In addition, culverts shall not exceed the headwater requirements as established below:

*D.4.2.3 Headwater*

- For culverts 18-inch diameter or less, the maximum allowable headwater elevation for the 100-year, 24-hour design storm (measured from the inlet invert) shall not exceed 2 times the pipe diameter or arch-culvert-rise.
- For culverts larger than 18-inch diameter, the maximum allowable headwater elevation for the 100-year, 24-hour design storm (measured from the inlet invert) shall not exceed 1.5 times the pipe diameter or arch-culvert-rise.
- The maximum headwater elevation at the 100-year, 24-hour design flow shall be below any road or parking lot subgrade.

*D.4.2.4 Conveyance Capacity*

Use the procedures presented in this section to analyze both inlet and outlet control conditions to determine which governs. Culvert capacity is then determined using graphical methods.

*D.4.2.5 Inlet Control Analysis*

Nomographs such as those provided in Figure D.4- 8 Headwater Depth for Smooth Interior Pipe Culverts with Inlet Control and Figure D.4- 9 Headwater Depth for Corrugated Pipe Culverts with Inlet Control below can be used to determine the inlet control headwater depth at design flow for various types of culverts and inlet configurations. These and other nomographs can be found in the FHWA publication *Hydraulic Design of Highway Culverts, HDS No. #5 (Report No. FHWA-NHI-01-020),* September 2001; or the WSDOT *Hydraulic Manual.*

Also available in the FHWA publication are the design equations used to develop the inlet control nomographs. These equations are presented below.

For **unsubmerged** inlet conditions (defined by $Q/AD^{0.5} \leq 3.5$);

Form 1*: $HW/D = H_c/D + K(Q/AD^{0.5})^M - 0.5S$** (equation 9)

Form 2*: $HW/D = K(Q/AD^{0.5})^M$ (equation 10)

For **submerged** inlet conditions (defined by $Q/AD^{0.5} \geq 4.0$);

$$HW/D = c(Q/AD^{0.5})^2 + Y - 0.5S^{**} \quad \text{(equation 11)}$$

Where HW = headwater depth above inlet invert (ft)

D = interior height of culvert barrel (ft)

$H_c$ = specific head (ft) at critical depth ($d_c + V_c^2/2g$)

Q = flow (cfs)

A = full cross-sectional area of culvert barrel (sf)

S = culvert barrel slope (ft/ft)

K,M,c,Y = constants from Table D.4- 6 Constants for Inlet Control Equations

The specified head $H_c$ is determined by the following equation:

$$H_c = d_c + V_c^2/2g \quad \text{(equation 12)}$$

where $d_c$ = critical depth (ft); see Figure D.4- 4 Critical Depth of Flow for Circular Culverts

$V_c$ = flow velocity at critical depth (fps)

g = acceleration due to gravity (32.2 ft/sec2)

*The appropriate equation form for various inlet types is specified in Table D.4- 6 Constants for Inlet Control Equations

**For mitered inlets, use +0.7S instead of –0.5S.

**NOTE:** Between the unsubmerged and submerged conditions, there is a transition zone ($3.5 < Q/AD^{0.5} < 4.0$) for which there is only limited hydraulic study information. The transition zone is defined empirically by drawing a curve between and tangent to the curves defined by the unsubmerged and submerged equations. In most cases, the transition zone is short and the curve is easily constructed.

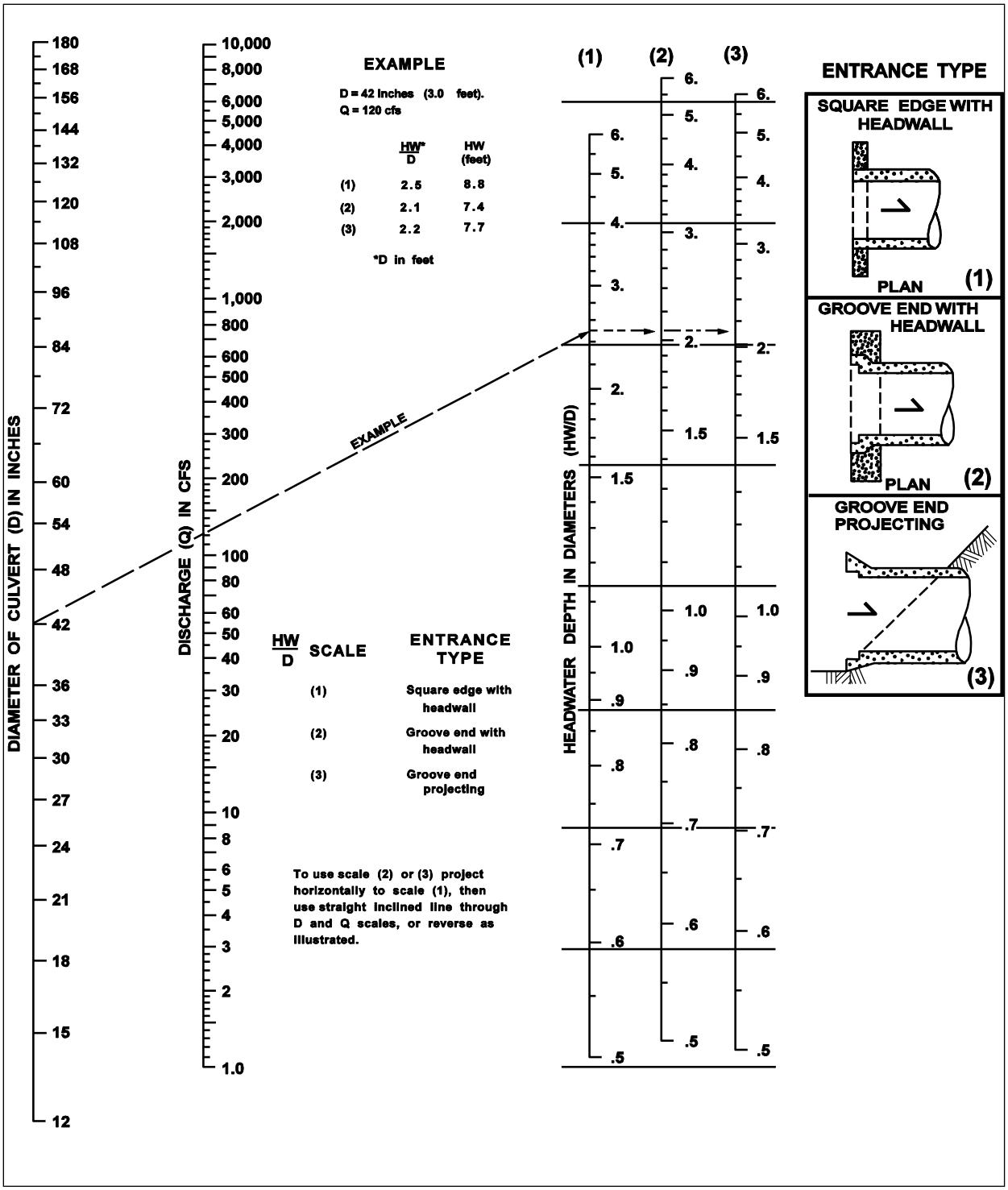


Figure D.4- 8 Headwater Depth for Smooth Interior Pipe Culverts with Inlet Control

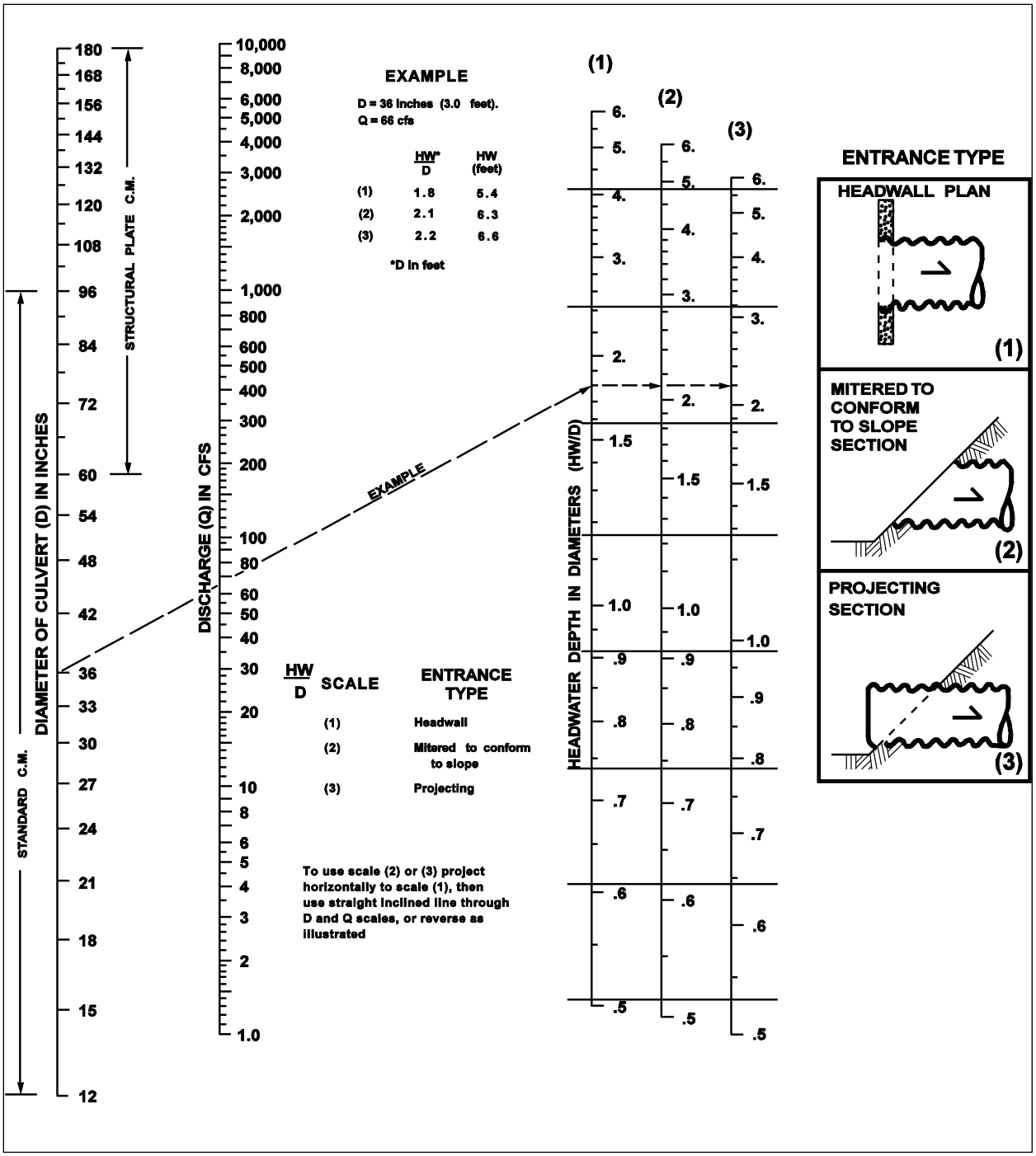


Figure D.4- 9 Headwater Depth for Corrugated Pipe Culverts with Inlet Control

| Shape and Material | Inlet Edge Description | Unsubmerged | | | Submerged | |
|---|---|---|---|---|---|---|
| | | Equation Form | *K* | *M* | *c* | *Y* |
| Circular Concrete | Square edge with headwall | 1 | 0.0098 | 2.0 | 0.0398 | 0.67 |
| | Groove end with headwall | | 0.0078 | 2.0 | 0.0292 | 0.74 |
| | Groove end projecting | | 0.0045 | 2.0 | 0.0317 | 0.69 |
| Circular CMP | Headwall | 1 | 0.0078 | 2.0 | 0.0379 | 0.69 |
| | Mitered to slope | | 0.0210 | 1.33 | 0.0463 | 0.75 |
| | Projecting | | 0.0340 | 1.50 | 0.0553 | 0.54 |
| Rectangular Box | 30° to 75° wingwall flares | 1 | 0.026 | 1.0 | 0.0385 | 0.81 |
| | 90° and 15° wingwall flares | | 0.061 | 0.75 | 0.0400 | 0.80 |
| | 0° wingwall flares | | 0.061 | 0.75 | 0.0423 | 0.82 |
| CM Boxes | 90° headwall | 1 | 0.0083 | 2.0 | 0.0379 | 0.69 |
| | Thick wall projecting | | 0.0145 | 1.75 | 0.0419 | 0.64 |
| | Thin wall projecting | | 0.0340 | 1.5 | 0.0496 | 0.57 |
| Arch CMP | 90° headwall | 1 | 0.0083 | 2.0 | 0.04960 | 0.57 |
| | Mitered to slope | | 0.0300 | 1.0 | .04630. 0496 | 0.75 |
| | Projecting | | 0.0340 | 1.5 | | 0.53 |
| Bottomless Arch CMP | 90° headwall | 1 | 0.0083 | 2.0 | 0.0379 | 0.69 |
| | Mitered to slope | | 0.0300 | 2.0 | 0.0463 | 0.75 |
| | Thin wall projecting | | 0.0340 | 1.5 | 0.0496 | 0.57 |

**Table D.4- 6 Constants for Inlet Control Equations**

*D.4.2.6 Outlet Control Analysis*

Nomographs such as those provided in Figure D.4- 10 Head for Culverts (Pipe W/"N"=0.012) Flowing Full with Outlet Control and Figure D.4- 11 Head for Culverts (Pipe W/"N"=0.024) Flowing Full with Outlet Control can be used to determine the **outlet control headwater depth** at design flow for various types of culverts and inlets. Outlet control nomographs other than those provided can be found in *FHWA HDS No. 5* or the *WSDOT Hydraulic Manual.*

The outlet control headwater depth can also be determined using the simple Backwater Analysis method presented in Section D.4 for analyzing pipe system capacity. This procedure is summarized as follows for culverts:

$$HW = H + TW - LS \qquad \text{(equation 13)}$$

where $H = H_f + H_e + H_{ex}$

$H_f$ = friction loss (ft) = $(V^2n^2L)/(2.22R^{1.33})$

**NOTE:** If $(H_f+TW-LS) < D$, adjust $H_f$ such that $(H_f+TW-LS) = D$. This will keep the analysis simple and still yield reasonable results (erring on the conservative side).

$H_e$ = entrance head loss (ft) = $K_e(V^2/2g)$

$H_{ex}$ = exit head loss (ft) = $V^{2/}2g$

TW = tailwater depth above invert of culvert outlet (ft)

**NOTE:** If $TW < (D+d_c)/2$, set $TW = (D+d_c)/2$. This will keep the analysis simple and still yield reasonable results.

L = length of culvert (ft)

S = slope of culvert barrel (ft/ft)

D = interior height of culvert barrel (ft)

V = barrel velocity (fps)

n = Manning's roughness coefficient from Table D.4- *2* Manning's "n" Values for Pipes

R = hydraulic radius (ft)

$K_e$ = entrance loss coefficient from Table D.4- 7 Entrance Loss Coefficients

| | | |
|---|---|---|
| G | = | acceleration due to gravity (32.2 ft/sec$^2$) |
| $d_c$ | = | critical depth (ft); see Figure D.4- 4 Critical Depth of Flow for Circular Culverts |

**NOTE:** The above procedure should not be used to develop stage/discharge curves for level pool routing purposes because its results are not precise for flow conditions where the hydraulic grade line falls significantly below the culvert crown (i.e., less than full flow conditions).

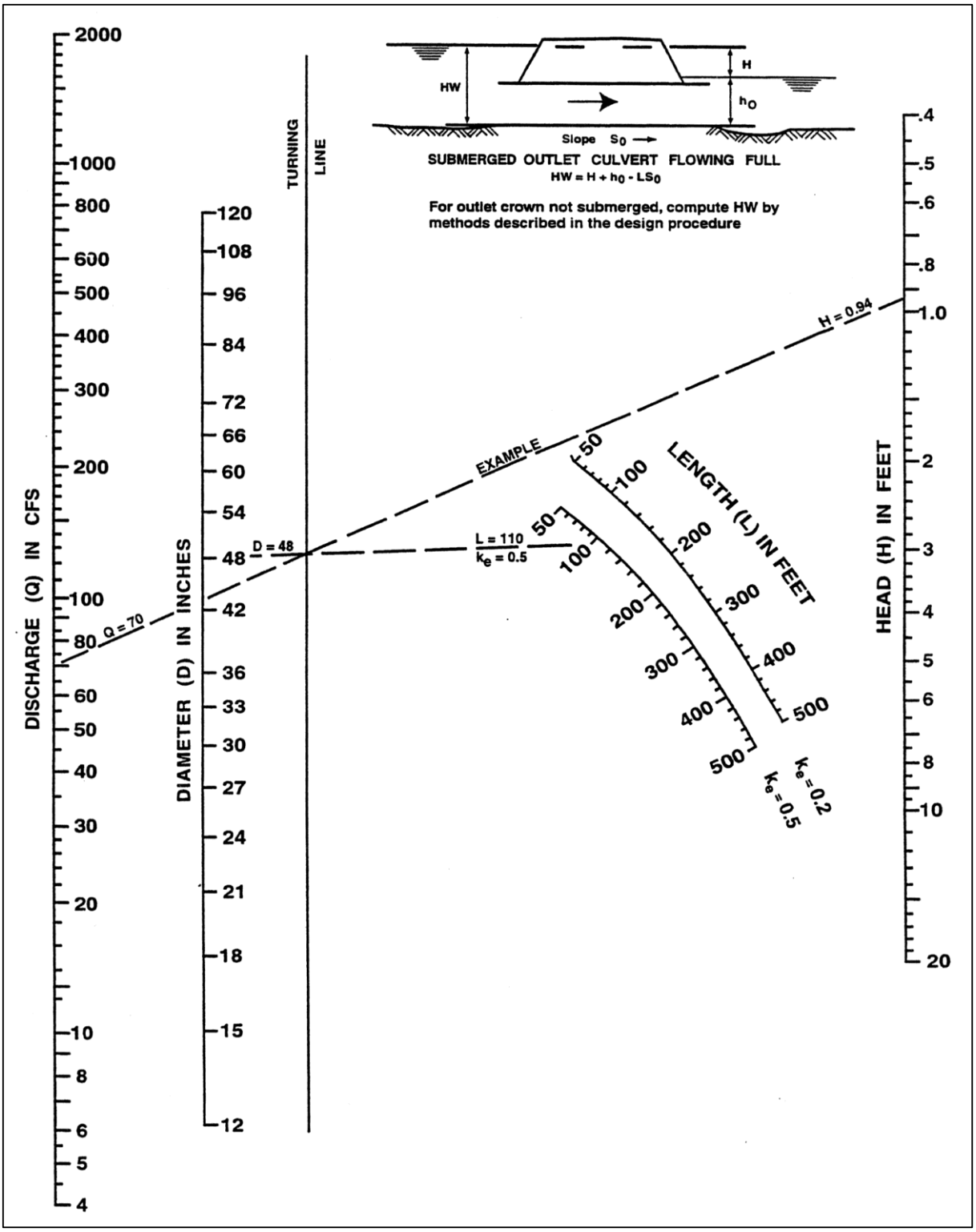


**Figure D.4- 10 Head for Culverts (Pipe W/"N"=0.012) Flowing Full with Outlet Control**

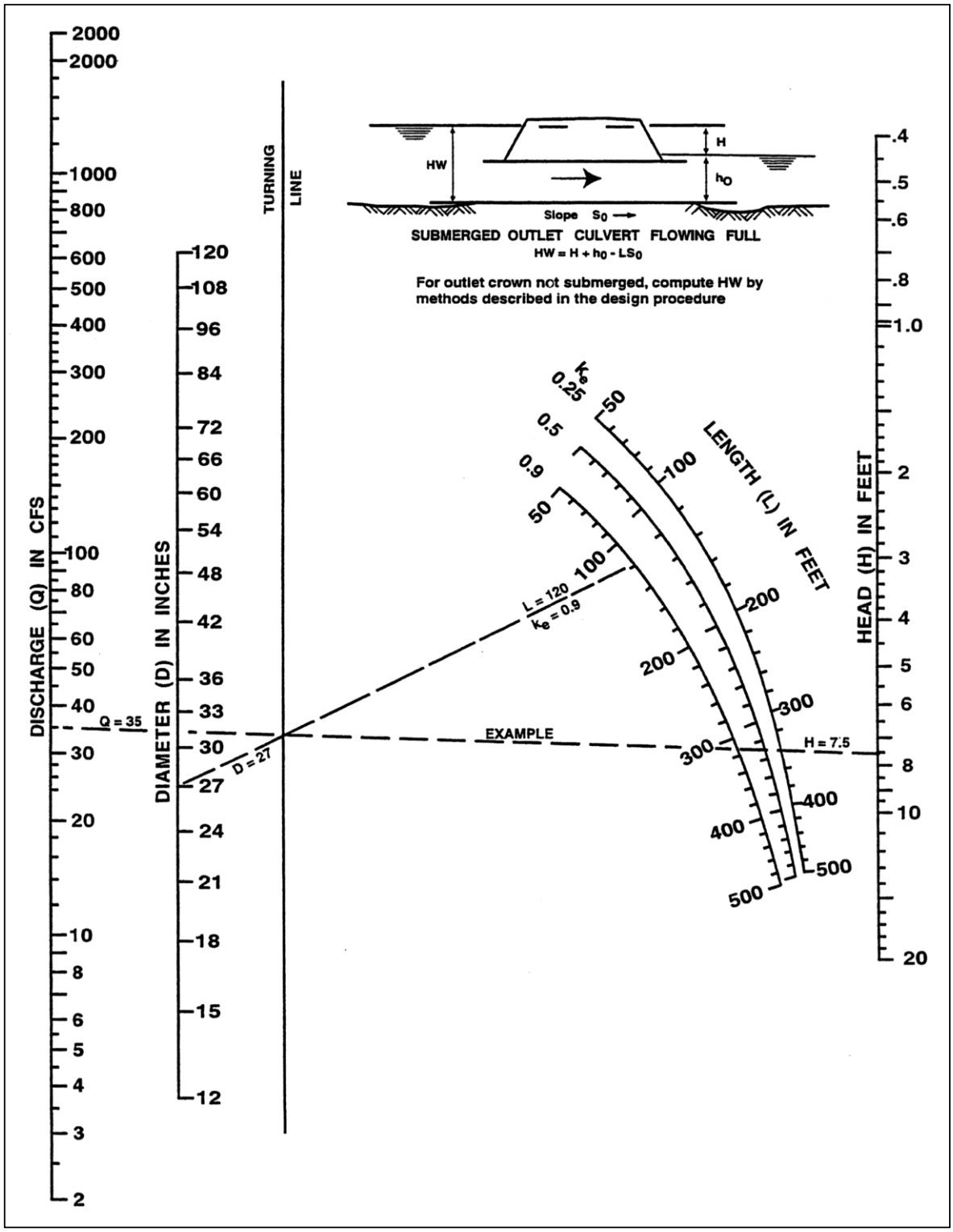


**Figure D.4- 11 Head for Culverts (Pipe W/"N"=0.024) Flowing Full with Outlet Control**

| Type of Structure and Design Entrance | Coefficient, $K_e$ |
|---|---|
| Pipe, Concrete, PVC, Spiral Rib, DI, and LCPE | |
| Projecting from fill, socket (bell) end | 0.2 |
| Projecting from fill, square cut end | 0.5 |
| Headwall, headwall and wingwalls | |
| Socket end of pipe (groove-end) | 0.2 |
| Square-edge | 0.5 |
| Rounded (radius = 1/12D) | 0.2 |
| Mitered to conform to fill slope | 0.7 |
| End section conforming to fill slope* | 0.5 |
| Beveled edges, 33.7° or 45° bevels | 0.2 |
| Side- or slope-tapered inlet | 0.2 |
| Pipe, Pipe-Arch, Corrugated Metal and Other Non-Concrete or D.I. | |
| Projecting from fill (no headwall) | 0.9 |
| Headwall, or headwall and wingwalls (square-edge) | 0.5 |
| Mitered to conform to fill slope (paved or unpaved slope) | 0.7 |
| End section conforming to fill slope* | 0.5 |
| Beveled edges, 33.7° or 45° bevels | 0.2 |
| Side- or slope-tapered inlet | 0.2 |
| Box, Reinforced Concrete | |
| Headwall parallel to embankment (no wingwalls) | |
| Square-edged on 3 edges | 0.5 |
| Rounded on 3 edges to radius of 1/12 barrel dimension | 0.2 |

| | |
|---|---|
| or beveled edges on 3 sides | |
| Wingwalls at 30° to 75° to barrel | |
| Square-edged at crown | 0.4 |
| Crown edge rounded to radius of 1/12 barrel dimension or beveled top edge | 0.2 |
| Wingwall at 10° to 25° to barrel | |
| Square-edged at crown | 0.5 |
| Wingwalls parallel (extension of sides) | |
| Square-edged at crown | 0.7 |
| Side- or slope-tapered inlet | 0.2 |

**Table D.4- 7 Entrance Loss Coefficients**

**NOTE:** "End section conforming to fill slope" are the sections commonly available from manufacturers. From limited hydraulic tests they are equivalent in operation to a headwall in both **inlet and outlet control**. Some end sections incorporating a **closed taper** in their design have a superior hydraulic performance.

*D.4.2.7 Inlets and Outlets*

All inlets and outlets in or near roadway embankments must be flush with and conforming to the slope of the embankments.

- For culverts 18-inch diameter and larger, the embankment around the culvert inlet shall be protected from erosion by **rock lining or riprap** as specified in Section D.5.1, except the length shall extend at least 5 feet upstream of the culvert, and the height shall be at or above the design headwater elevation.
- **Inlet structures**, such as concrete headwalls, may provide a more economical design by allowing the use of smaller entrance coefficients and, hence, smaller diameter culverts. When properly designed, they will also protect the embankment from erosion and eliminate the need for rock lining.
- In order to maintain the stability of roadway embankments, concrete headwalls, wingwalls, or tapered inlets and outlets may be required if **right-of-way or easement constraints** prohibit the culvert from extending to the toe of the embankment slopes. All inlet structures or headwalls

installed in or near roadway embankments must be flush with and conforming to the slope of the embankment.

- **Debris barriers (trash racks)** are required on the inlets of all culverts that are over 60 feet in length and are 12 to 36 inches in diameter. This requirement also applies to the inlets of pipe systems. See Figure D.4- 7 Debris Barriers for a debris barrier detail. Exceptions are culverts on Type 1 or 2 streams.
- For culverts 18-inch diameter and larger, the receiving channel of the outlet shall be protected from erosion by **rock lining** specified in Section D.5.1, except the height shall be one foot above maximum tailwater elevation or one foot above the crown per Figure D.5- 1 Pipe/Culvert Outfall Discharge Protection in Section D.5., whichever is higher.

*D.4.3 Open Channels*

This section presents the methods, criteria, and details for hydraulic analysis and design of open channels.

*D.4.3.1 Natural Channels*

*Natural channels* are defined as those that have occurred naturally due to the flow of surface waters, or those that, although originally constructed by human activity, have taken on the appearance of a natural channel including a stable route and biological community. They may vary hydraulically along each channel reach and should be left in their natural condition, wherever feasible or required, in order to maintain natural hydrologic functions and wildlife habitat benefits from established vegetation.

*D.4.3.2 Constructed Channels*

*Constructed channels* are those constructed or maintained by human activity and include bank stabilization of natural channels. Constructed channels shall be either vegetation-lined, rock lined, or lined with appropriately bioengineered vegetation.

- **Vegetation-lined channels** are the most desirable of the constructed channels when properly designed and constructed. The vegetation stabilizes the slopes of the channel, controls erosion of the channel surface, and removes pollutants. The channel storage, low velocities, water quality benefits, and greenbelt multiple-use benefits create significant advantages over other constructed channels. The presence of vegetation in channels creates turbulence, which results in loss of energy and increased flow retardation; therefore, the design engineer must consider sediment deposition and scour, as well as flow capacity, when designing the channel.
- **Rock-lined channels** are necessary where a vegetative lining will not provide adequate protection from erosive velocities they may be constructed with riprap, gabions, or slope mattress linings. The rock lining increases the turbulence, resulting in a loss of energy and increased flow retardation. Rock lining also permits a higher design velocity and therefore a

steeper design slope than in grass-lined channels. Rock linings are also used for erosion control at culvert and storm drain outlets, sharp channel bends, channel confluences, and locally steepened channel sections.

- **Bioengineered vegetation lining** is a desirable alternative to the conventional methods of rock armoring. *Soil bioengineering* is a highly specialized science that uses living plants and plant parts to stabilize eroded or damaged land. Properly bioengineering systems are capable of providing a measure of immediate soil protection and mechanical reinforcement. As the plants grow they produce vegetative protective cover and a root reinforcing matrix in the soil mantle. This root reinforcement serves several purposes:
    - The developed anchor roots provide both shear and tensile strength to the soil, thereby providing protection from the frictional shear and tensile velocity components to the soil mantle during the time when flows are receding and pore pressure is high in the saturated bank.
    - The root mat provides a living filter in the soil mantle that allows for the natural release of water after the high flows have receded.
    - The combined root system exhibits active friction transfer along the length of the living roots. This consolidates soil particles in the bank and serves to protect the soil structure from collapsing and the stabilization measures from failing.

*D.4.3.3 Design Flows*

Design flows for sizing or assessing the capacity of open channels shall be determined using the hydrologic analysis methods described in this chapter. Single event models as described in Volume III, Chapter 2 of the SWMMWW may be used to determine design flows. In addition, open channel shall meet the following:

- **Open channels** shall be designed to provide required conveyance capacity while minimizing erosion and allowing for aesthetics, habitat preservation, and enhancement.
- **An access easement for maintenance** is required along all constructed channels located on private property. Required easement widths and building setback lines vary with channel top width.
- **The maximum distance** from the edge of the adjacent access to the farthest point shall be eighteen feet (18').
- **Channel cross-section geometry** shall be trapezoidal, triangular, parabolic, or segmental as shown in Figure D.4- 12 through Figure D.4- 14. Side slopes shall be no steeper than 3:1 for vegetation-lined channels and 2:1 for rock-lined channels.
- **Vegetation-lined channels** shall have bottom slope gradients of 6% or less and a maximum velocity at design flow of 5 fps (see Table D.4- 8 Channel Protection).

- **Rock-lined channels or bank stabilization of natural channels** shall be used when design flow velocities exceed 5 feet per second. Rock stabilization shall be in accordance with Table D.4- 8 Channel Protection or stabilized with bioengineering methods as described above in "Constructed Channels."

| NO. | DIMENSIONS | | | | HYDRAULICS | | | |
|---|---|---|---|---|---|---|---|---|
| | Side Slopes | B | H | W | A | WP | R | $R^{(2/3)}$ |
| D-1 | -- | -- | 6.5" | 5'-0" | 1.84 | 5.16 | 0.356 | 0.502 |
| D-1C | -- | -- | 6" | 25'-0" | 6.25 | 25.50 | 0.245 | 0.392 |
| D-2A | 1.5:1 | 2'-0" | 1'-0" | 5'-0" | 3.50 | 5.61 | 0.624 | 0.731 |
| B | 2:1 | 2'-0" | 1'-0" | 6'-0" | 4.00 | 6.47 | 0.618 | 0.726 |
| C | 3:1 | 2'-0" | 1'-0" | 8'-0" | 5.00 | 8.32 | 0.601 | 0.712 |
| D-3A | 1.5:1 | 3'-0" | 1'-6" | 7'-6" | 7.88 | 8.41 | 0.937 | 0.957 |
| B | 2:1 | 3'-0" | 1'-6" | 9'-0" | 9.00 | 9.71 | 0.927 | 0.951 |
| C | 3:1 | 3'-0" | 1'-6" | 12'-0" | 11.25 | 12.49 | 0.901 | 0.933 |
| D-4A | 1.5:1 | 3'-0" | 2'-0" | 9'-0" | 12.00 | 10.21 | 1.175 | 1.114 |
| B | 2:1 | 3'-0" | 2'-0" | 11'-0" | 14.00 | 11.94 | 1.172 | 1.112 |
| C | 3:1 | 3'-0" | 2'-0" | 15'-0" | 18.00 | 15.65 | 1.150 | 1.098 |
| D-5A | 1.5:1 | 4'-0" | 3'-0" | 13'-0" | 25.50 | 13.82 | 1.846 | 1.505 |
| B | 2:1 | 4'-0" | 3'-0" | 16'-0" | 30.00 | 16.42 | 1.827 | 1.495 |
| C | 3:1 | 4'-0" | 3'-0" | 22'-0" | 39.00 | 21.97 | 1.775 | 1.466 |
| D-6A | 2:1 | -- | 1'-0" | 4'-0" | 2.00 | 4.47 | 0.447 | 0.585 |
| B | 3:1 | -- | 1'-0" | 6'-0" | 3.00 | 6.32 | 0.474 | 0.608 |
| D-7A | 2:1 | -- | 2'-0" | 8'-0" | 8.00 | 8.94 | 0.894 | 0.928 |

| | | | | | | | | |
|---|---|---|---|---|---|---|---|---|
| B | 3:1 | -- | 2'-0" | 12'-0" | 12.00 | 12.65 | 0.949 | 0.965 |
| D-8A | 2:1 | -- | 3'-0" | 12'-0" | 18.00 | 13.42 | 1.342 | 1.216 |
| B | 3:1 | -- | 3'-0" | 18'-0" | 27.00 | 18.97 | 1.423 | 1.265 |
| D-9 | 7:1 | -- | 1'-0" | 14'-0" | 7.00 | 14.14 | 0.495 | 0.626 |
| D-10 | 7:1 | -- | 2'-0" | 28'-0" | 28.00 | 28.28 | 0.990 | 0.993 |
| D-11 | 7:1 | -- | 3'-0" | 42'-0" | 63.00 | 42.43 | 1.485 | 1.302 |

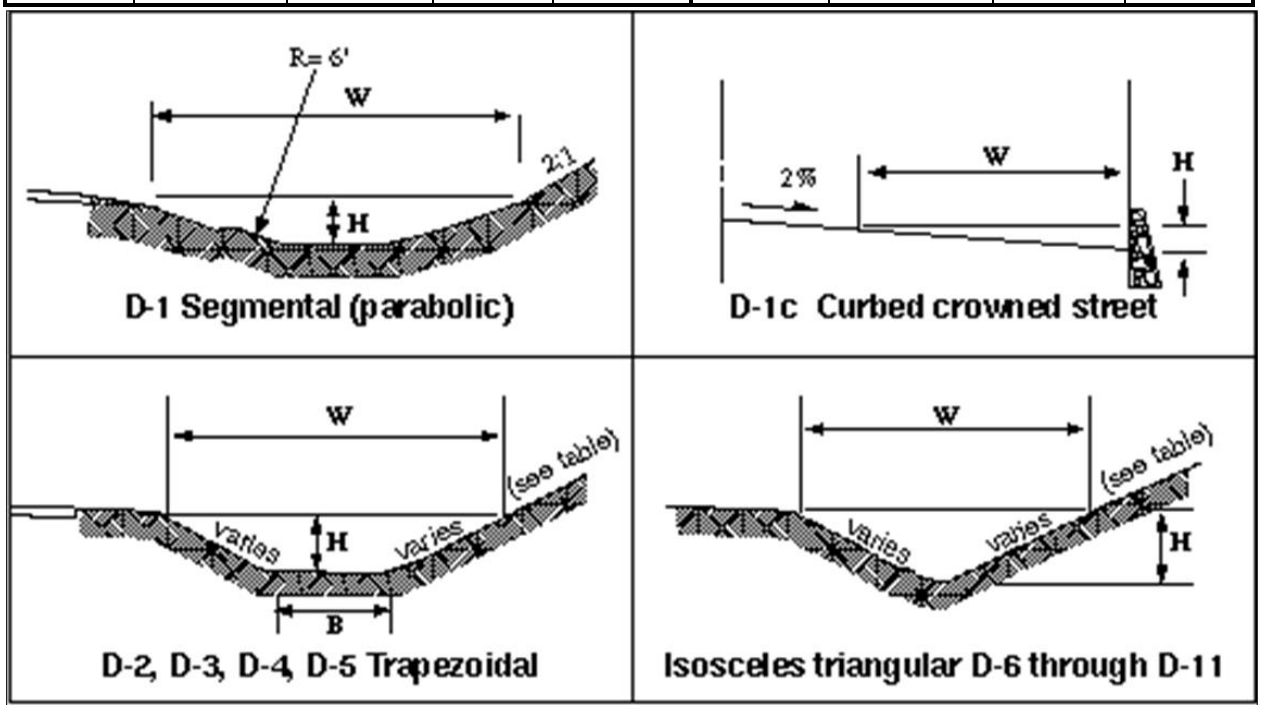


Figure D.4- 12 Ditches – Common Section Properties

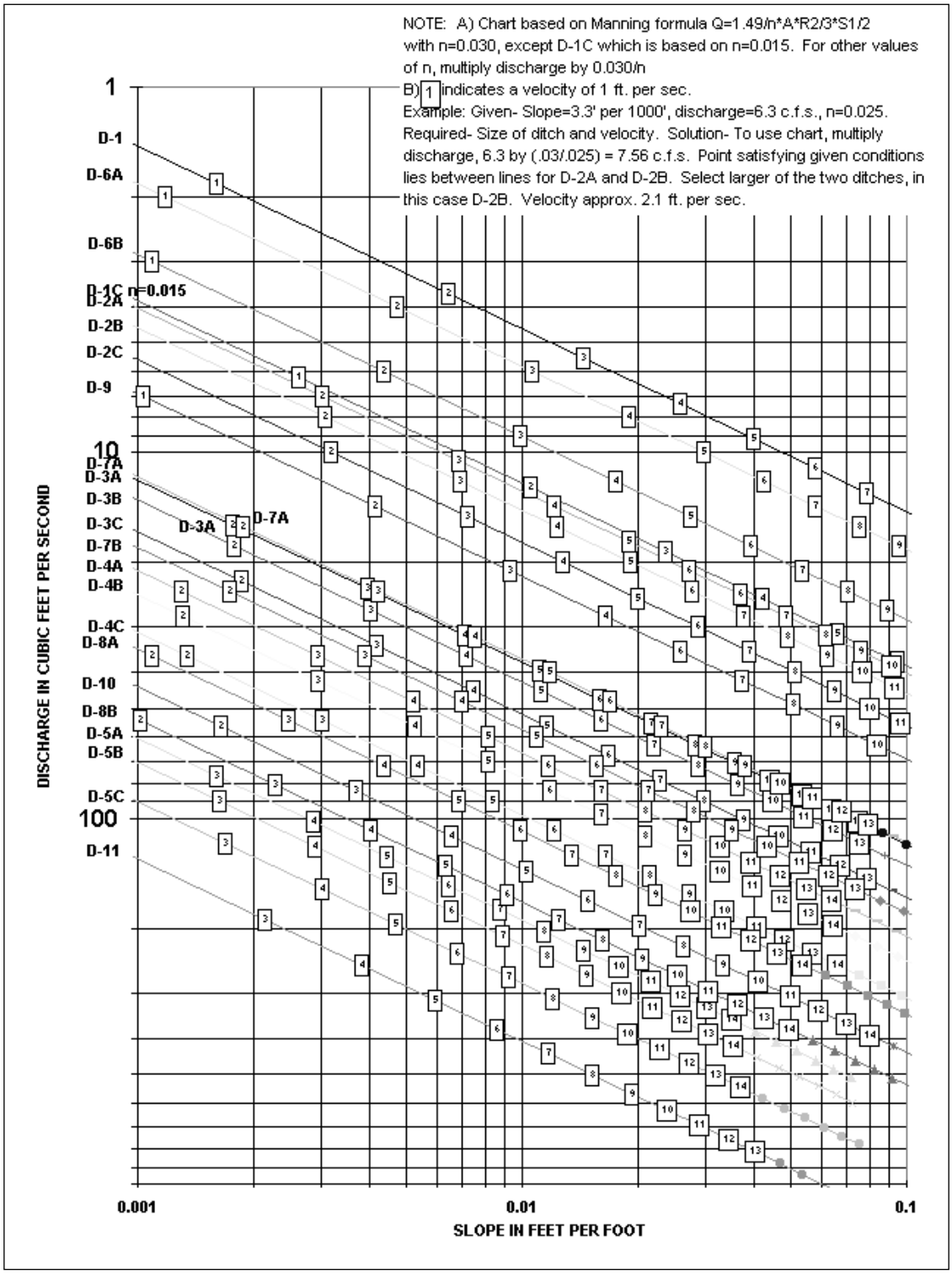


**Figure D.4- 13 Drainage Ditches – Slope/Discharge Chart**

## Figure D.4- 14 Geometric Elements of Common Sections

| Section | Area A | Wetted perimeter P | Hydraulic radius R | Top width W | Hydraulic depth D | Section factor Z |
|---|---|---|---|---|---|---|
| 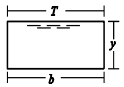 Rectangle | $by$ | $b + 2y$ | $\frac{by}{b + 2y}$ | $b$ | $y$ | $by^{1.5}$ |
| 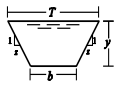 Trapezoid | $(b + zy)y$ | $b + 2y\sqrt{1 + z^2}$ | $\frac{(b + zy)y}{b + 2y\sqrt{1 + z^2}}$ | $b + 2zy$ | $\frac{(b + zy)y}{b + 2zy}$ | $\frac{[(b + zy)y]^{1.5}}{\sqrt{b + 2zy}}$ |
| 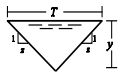 Triangle | $zy^2$ | $2y\sqrt{1 + z^2}$ | $\frac{zy}{2\sqrt{1 + z^2}}$ | $2zy$ | $\frac{1}{2}y$ | $\frac{\sqrt{2}}{2}zy^{2.5}$ |
| 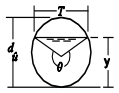 Circle | $\frac{1}{8}(\theta - \sin\theta)d_{\hat{u}}^2$ | $\frac{1}{2}\theta d_{\hat{u}}$ | $\frac{1}{4}\left(1 - \frac{\sin\theta}{\theta}\right)d_{\hat{u}}$ | $\left(\sin\left(\frac{1}{2}\theta\right)d_{\hat{u}}\right)$ or $2\sqrt{y(d_{\hat{u}} - y)}$ | $\frac{1}{8}\left(\frac{\theta - \sin\theta}{\sin\frac{1}{2}\theta}\right)d_{\hat{u}}$ | $\frac{\sqrt{2}}{32}\frac{(\theta - \sin\theta)^{1.5}}{(\sin\frac{1}{2}\theta)^{0.5}}d_{\hat{u}}^{2.5}$ |
| 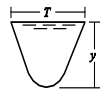 Parabola | $\frac{2}{3}Ty$ | $T + \frac{8y^2}{3T}$ * | $\frac{2T^2y}{3T^2 + 8y^2}$ * | $\frac{3A}{2y}$ | $\frac{2}{3}y$ | $\frac{2}{9}\sqrt{6}Ty^{1.5}$ |
| 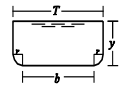 Round-cornered Rectangle (y>>r) | $(\frac{\pi}{2} - 2)r^2 + (b + 2r)y$ | $(\pi - 2)r + b + 2y$ | $\frac{(\frac{\pi}{2} - 2)r^2 + (b + 2r)y}{(\pi - 2)r + b + 2y}$ | $b + 2r$ | $\frac{(\frac{\pi}{2} - 2)r^2}{(b + 2r)} + y$ | $\frac{[(\frac{\pi}{2} - 2)r^2 + (b + 2r)y]^{1.5}}{\sqrt{b + 2y}}$ |
| 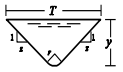 Round-bottomed Triangle | $\frac{T^2}{4z} - \frac{r^2}{z}(1 - z\cot^{-1}z)$ | $\frac{T}{z}\sqrt{1 + z^2} - \frac{2r}{z}(1 - z\cot^{-1}z)$ | $\frac{A}{P}$ | $2[z(y - r) + r\sqrt{1 + z^2}]$ | $\frac{A}{T}$ | $A\sqrt{\frac{A}{T}}$ |

*Satisfactory approximation for the interval 0<x"1, where x=4y/T. When x>1, use the exact expression $P = \left(\frac{T}{2}\right)\left[\sqrt{1 + x^2} + \frac{1}{x}\ln\left(x + \sqrt{1 + x^2}\right)\right]$

| Velocity at Design Flow (fps) | | REQUIRED PROTECTION | | |
|---|---|---|---|---|
| **Greater than** | **Less than or equal to** | **Type of Protection** | **Thickness** | **Minimum Height Above Design Water Surface** |
| 0 | 5 | Grass lining or bioengineered lining | N/A | 0.5 foot |
| 5 | 8 | Rock lining[(1)] or<br>bioengineered lining | 1 foot | 1 foot |
| 8 | 12 | Riprap[(2)] | 2 feet | 2 feet |
| 12 | 20 | Slope mattress gabion, etc. | Varies | 2 feet |

(1) Rock Lining shall be reasonable well graded as follows:
Maximum stone size: 12 inches
Median stone size: 8 inches
Minimum stone size: 2 inches

(2) Riprap shall be reasonably well graded as follows:
Maximum stone size: 24 inches
Median stone size: 16 inches
Minimum stone size: 4 inches

***Note:*** *Riprap sizing is governed by side slopes on channel, assumed to be approximately 3:1.*

**Table D.4- 8 Channel Protection**

*D.4.3.4 Conveyance Capacity*

There are three acceptable methods of analysis for sizing and analyzing the capacity of open channels:

- Manning's equation for preliminary sizing
- Direct Step backwater method
- Standard Step backwater method

*D.4.3.5 Manning's Equation for Preliminary Sizing*

Manning's equation is used for preliminary sizing of open channel reaches of uniform cross section and slope (i.e., prismatic channels) and uniform roughness. This method assumes the flow depth (or normal depth) and flow velocity remain constant throughout the channel reach for a given flow.

The charts in Figure D.4- 12 Ditches – Common Section Properties and Figure D.4- 13 Drainage Ditches – Slope/Discharge Chart can be used to obtain graphic solutions of Manning's equation for common ditch sections. For conditions outside the range of these charts or for more precise results, Manning's equation can be solved directly from its classic forms shown in Equations 7 and 8 Section D.4.1.2.

Table D.4- *9* Values of "n" for Channels below provides a reference for selecting the appropriate "*n*" values for open channels. A number of engineering reference books, such as *Open-Channel Hydraulics* by V.T. Chow, may also be used as guides to select "*n*" values. Figure D.4- 14 Geometric Elements of Common Sections contains the geometric elements of common channel sections useful in determining area A, wetted perimeter WP, and hydraulic radius (R=A/WP).

If flow restrictions raise the water level above normal depth within a given channel reach, a *backwater condition* (or non-uniform flow) is said to exist. This condition can result from flow restrictions created by a downstream culvert, bridge, dam, pond, lake, etc., and even a downstream channel reach having a higher normal flow depth. If backwater conditions are found to exist for the design flow, a backwater profile must be computed to verify that the channel's capacity is still adequate as designed. The Direct Step or Standard Step backwater methods presented in this section can be used for this purpose.

| **Type of Channel and Description** | **Manning's "*n*"* (Normal)** |
|---|---|
| **I. Constructed Channels** | |
| a. Earth, straight and uniform | |
| 1. Clean, recently completed | 0.018 |
| 2. Gravel, uniform section, clean | 0.025 |
| 3. With short grass, few weeds | 0.027 |
| b. Earth, winding and sluggish | |
| 1. No vegetation | 0.025 |
| 2. Grass, some weeds | 0.030 |
| 3. Dense weeds or aquatic plants in deep channels | 0.035 |
| 4. Earth bottom and rubble sides | 0.030 |
| 5. Stony bottom and weedy banks | 0.035 |
| 6. Cobble bottom and clean sides | 0.040 |
| c. Rock lined | |
| 1. Smooth and uniform | 0.035 |
| 2. Jagged and irregular | 0.040 |
| d. Channels not maintained, weeds and brush uncut | |
| 1. Dense weeds, high as flow depth | 0.080 |

| **Type of Channel and Description** | **Manning's "*n*"* (Normal)** |
|---|---|
| **II. Natural Streams** | |
| **II-1 Minor Streams (top width at flood stage <100 ft)** | |
| a. Streams on plain | |
| 1. Clean, straight, full stage no rifts or deep pools | 0.030 |
| 2. Same as #1, but more stones and weeds | 0.035 |
| 3. Clean, winding, some pools and shoals | 0.040 |
| 4. Same as #3, but some weeds | 0.040 |
| 5. Same as #4, but more stones | 0.070 |
| 6. Sluggish reaches, weedy deep pools | 0.100 |
| 7. Very weedy reaches, deep pools, or floodways with heavy stand of timber and underbrush | 0.050 |
| b. Mountain streams, no vegetation in channel, banks usually steep, trees and brush along banks submerged at high stages | |
| 1. Bottom: gravel, cobbles, and few boulders | 0.040 |
| 2. Bottom: cobbles with large boulders | 0.050 |
| **II-2 Floodplains** | |

| | | | |
|---|---|---|---|
| 2. Clean bottom, brush on sides | 0.050 | a. Pasture, no brush | |
| 3. Same as #2, highest stage of flow | 0.070 | 1. Short grass | 0.030 |
| 4. Dense brush, high stage | 0.100 | 2. High grass | 0.035 |
| | | b. Cultivated areas | |
| | | 1. No crop | 0.030 |
| | | 2. Mature row crops | 0.035 |
| | | 3. Mature field crops | 0.040 |
| | | c. Brush | |
| | | 1. Scattered brush, heavy weeds | 0.050 |
| | | 2. Light brush and trees | 0.060 |
| | | 3. Medium to dense brush | 0.070 |
| | | 4. Heavy, dense brush | 0.100 |
| | | d. Trees | |
| | | 1. Dense willows, straight | 0.150 |
| | | 2. Cleared land with tree stumps, no sprouts | 0.040 |
| | | 3. Same as #2, but with heavy growth of sprouts | 0.060 |
| | | 4. Heavy stand of timber, a few down trees, little undergrowth, flood stage below branches | 0.100 |
| | | 5. Same as #4, but with flood stage reaching branches | 0.120 |

***Note:** These "n" values are "normal" values for use in analysis of channels. For conservative design for channel capacity, the maximum values listed in other references should be considered. For channel bank stability, the minimum values should be considered.*

**Table D.4- 9 Values of "n" for Channels**

### *D.4.3.6 Direct Step Backwater Method*

The Direct Step Backwater Method can be used to compute backwater profiles on prismatic channel reaches (i.e. reaches having uniform cross section and slope) where a backwater condition or restriction to normal flow is known to exist. The method can be applied to a series of prismatic channel reaches in succession beginning at the downstream end of the channel and computing the profile upstream.

Calculating the coordinates of the water surface profile using the method is an iterative process achieved by choosing a range of flow depths, beginning at the downstream end, and proceeding incrementally up to the point of interest or to the point of normal flow depth. This is best accomplished by the use of a table (see Figure D.4- 15 Direct Step Backwater Method Example) or computer programs.

| $y$ (1) | $A$ (2) | $R$ (3) | $R^{4/3}$ (4) | $V$ (5) | $\alpha V^2/2g$ (6) | $E$ (7) | $\Delta E$ (8) | $S_f$ (9) | $\bar{S}_f$ (10) | $S_o - \bar{S}_f$ (11) | $\Delta x$ (12) | $x$ (13) |
|---|---|---|---|---|---|---|---|---|---|---|---|---|
| 6.0 | 72.0 | 2.68 | 3.72 | 0.42 | 0.0031 | 6.0031 | - | 0.00002 | - | - | - | - |
| 5.5 | 60.5 | 2.46 | 3.31 | 0.50 | 0.0040 | 5.5040 | 0.4990 | 0.00003 | 0.000025 | 0.00698 | 71.50 | 71.5 |
| 5.0 | 50.0 | 2.24 | 2.92 | 0.60 | 0.0064 | 5.0064 | 0.4976 | 0.00005 | 0.000040 | 0.00696 | 71.49 | 142.99 |
| 4.5 | 40.5 | 2.01 | 2.54 | 0.74 | 0.0098 | 4.5098 | 0.4966 | 0.00009 | 0.000070 | 0.00693 | 71.64 | 214.63 |
| 4.0 | 32.0 | 1.79 | 2.17 | 0.94 | 0.0157 | 4.0157 | 0.4941 | 0.00016 | 0.000127 | 0.00687 | 71.89 | 286.52 |
| 3.5 | 24.5 | 1.57 | 1.82 | 1.22 | 0.0268 | 3.5268 | 0.4889 | 0.00033 | 0.000246 | 0.00675 | 72.38 | 358.90 |
| 3.0 | 18.0 | 1.34 | 1.48 | 1.67 | 0.0496 | 3.0496 | 0.4772 | 0.00076 | 0.000547 | 0.00645 | 73.95 | 432.85 |
| 2.5 | 12.5 | 1.12 | 1.16 | 2.40 | 0.1029 | 2.6029 | 0.4467 | 0.00201 | 0.001387 | 0.00561 | 79.58 | 512.43 |
| 2.0 | 8.0 | 0.89 | 0.86 | 3.75 | 0.2511 | 2.2511 | 0.3518 | 0.00663 | 0.004320 | 0.00268 | 131.27 | 643.70 |

The step computations are carried out as shown in the above table. The values in each column of the table are explained as follows:

Col. 1. Depth of flow (ft) assigned from 6 to 2 feet

Col. 2. Water area ($ft^2$) corresponding to depth $y$ in Col. 1

Col. 3 Hydraulic radius (ft) corresponding to $y$ in Col. 1

Col. 4. Four-thirds power of the hydraulic radius

Col. 5. Mean velocity (fps) obtained by dividing $Q$ (30 cfs) by the water area in Col. 2

Col. 6. Velocity head (ft)

Col. 7. Specific energy (ft) obtained by adding the velocity head in Col. 6 to depth of flow in Col. 1

Col. 8. Change of specific energy (ft) equal to the difference between the $E$ value in Col. 7 and that of the previous step.

Col. 9. Friction slope $S_f$, computed from $V$ as given in Col. 5 and $R^{4/3}$ in Col. 4

Col.10. Average friction slope between the steps, equal to the arithmetic mean of the friction slope just computed in Col. 9 and that of the previous step

Col.11. Difference between the bottom slope, $S_o$, and the average friction slope, $S_f$

Col.12. Length of the reach (ft) between the consecutive steps;
Computed by $\Delta x = \Delta E/(S_o - S_f)$ or by dividing the value in Col. 8 by the value in Col. 11

Col.13. Distance from the beginning point to the section under consideration. This is equal to the cumulative sum of the values in Col. 12 computed for previous steps.

There are a number of commercial software programs for use on personal computers that use variations of the Standard Step backwater method for determining water surface profiles. The most common and widely accepted program is called HEC-2, published and supported by the United States Army Corps of Engineers Hydraulic Engineering Center. It is the model required by FEMA for use in performing flood hazard studies for preparing flood insurance maps. Other programs include WSP-2, published by the SCS, and WSPRO or E-431, published by USGS.

**Figure D.4- 15 Direct Step Backwater Method Example**

Equating the total head at cross section 1 and 2, the following equation may be written:

$$S_0 \Delta x + y_1 + \alpha_1 \frac{V_1^2}{2g} = y_2 + \alpha_2 \frac{V_2^2}{2g} + S_f \Delta x$$

(equation 14)

where, $\Delta x$ = distance between cross sections (ft)

$y_1, y_2$ = depth of flow (ft) at cross sections 1 and 2

$V_1, V_2$ = velocity (fps) at cross sections 1 and 2

$\alpha_1, \alpha_2$ = energy coefficient at cross sections 1 and 2

$S_0$ = bottom slope (ft/ft)

$S_f$ = friction slope = $(n_2 V_2)/2.21R^{1.33})$

$g$ = acceleration due to gravity, (32.2 ft/sec$^2$)

If the specific energy E at any one cross-section is defined as follows:

$$E = y + \alpha \frac{V^2}{2g}$$

(equation 15)

Assuming $\alpha = \alpha_1 = \alpha_2$ where $\alpha$ is the energy coefficient which corrects for the non-uniform distribution of velocity over the channel cross section, equations 14 and 15 can be combined and rearranged to solve for $\Delta x$ as follows:

$$\Delta x = \frac{(E_2 - E_1)}{(S_0 - S_f)} = \frac{\Delta E}{(S_0 - S_f)}$$

(equation 16)

Typically values of the energy coefficient $\alpha$ are as follows:

- Channels, regular section 1.15
- Natural streams 1.3
- Shallow vegetated flood fringes (includes channel) 1.75

For a given flow, channel slope, Manning's "*n*," and energy coefficient $\alpha$, together with a beginning water surface elevation $y_2$, the values of $\Delta x$ may be calculated for arbitrarily chosen values of $y_1$. The coordinates defining the water surface profile are obtained from the cumulative sum of $\Delta x$ and corresponding values of $y$.

The **normal flow depth $y_n$** should first be calculated from Manning's equation to establish the upper limit of the backwater effect.

*D.4.3.7 Standard Step Backwater Method*

The Standard Step Backwater Method is a variation of the Direct Step Backwater Method and can be used to compute backwater profiles on both prismatic and non-prismatic channels. In this method, stations are established along the channel where cross section data is known or has been determined through field survey. The computation is carried out in steps from station to station rather than throughout a given channel reach as is done in the Direct Step method. As a result, the analysis involves significantly more trial-and-error calculation in order to determine the flow depth at each station.

*D.4.3.8 Computer Applications*

There are several different computer programs capable of the iterative calculations involved for these analyses. The project engineer is responsible for providing information describing how the program was used, assumptions the program makes and descriptions of all variables, columns, rows, summary tables, and graphs. The most current version of any software program shall be used for analysis. Auburn may find specific programs not acceptable for use in design. Please check with City of Auburn Development Services at 253-931-3090, to confirm the applicability of a particular program prior to starting design.

D.4.3.9 Riprap Design[1]

Proper riprap design requires the determination of the median size of stone, the thickness of the riprap layer, the gradation of stone sizes, and the selection of angular stones, which will interlock when placed. Research by the U.S. Army Corps of Engineers has provided criteria for selecting the **median stone weight, $W_{50}$** (Figure D.4- 16 Mean Channel Velocity vs Medium Stone Weight (W50) and Equivalent Stone Diameter). If the riprap is to be used in a highly turbulent zone (such as at a culvert outfall, downstream of a stilling basin, at sharp changes in channel geometry, etc.), the median stone $W_{50}$ should be increased from 200% to 600% depending on the severity of the locally high turbulence. The thickness of the riprap layer should generally be twice the **median stone diameter ($D_{50}$)** or at least equivalent to the diameter of the maximum stone. The riprap should have a reasonably well-graded assortment of stone sizes within the following gradation:

[1] From a paper prepared by M. Schaefer, Dam Safety Section, Washington State Department of Ecology.

$1.25 \leq D_{max}/D_{50} \leq 1.50$

$D_{15}/D_{50} = 0.50$

$D_{min}/D_{50} = 0.25$

*Riprap Filter Design*

Riprap should be underlain by a sand and gravel filter (or filter fabric) to keep the fine materials in the underlying channel bed from being washed through the voids in the riprap. Likewise, the filter material must be selected so that it is not washed through the voids in the riprap. Adequate filters can usually be provided by a reasonably well graded sand and gravel material where:

$D_{15} < 5d_{85}$

The variable $d_{85}$ refers to the sieve opening through which 85% of the material being protected will pass, and $D_{15}$ has the same interpretation for the filter material. A filter material with a $D_{50}$ of 0.5 mm will protect any finer material including clay. Where very large riprap is used, it is sometimes necessary to use two filter layers between the material being protected and the riprap.

**Example:**

*What embedded riprap design should be used to protect a streambank at a level culvert outfall where the outfall velocities in the vicinity of the downstream toe are expected to be about 8 fps.*

From Figure D.4- 16 Mean Channel Velocity vs Medium Stone Weight (W50) and Equivalent Stone Diameter, $W_{50}$ = 6.5 lbs, but since the downstream area below the outfall will be subjected to severe turbulence, increase $W_{50}$ by 400% so that:

$W_{50}$ = 26 lbs, $D_{50}$ = 8.0 inches

The gradation of the riprap is shown in Figure D.4- 17 Riprap Gradation Curve, and the minimum thickness would be 1 foot (from Table D.4- 8 Channel Protection); however, 16 inches to 24 inches of riprap thickness would provide some additional insurance that the riprap will function properly in this highly turbulent area.

Figure D.4- 17 Riprap Gradation Curve shows that the gradation curve for ASTM C33, size number 57 coarse aggregate (used in concrete mixes), would meet the filter criteria. Applying the filter criteria to the coarse aggregate demonstrates that any underlying material whose gradation was coarser than that of concrete sand would be protected.

For additional information and procedures for specifying filters for riprap, refer to *the Army Corps of Engineers Manual EM 1110-2-1601 (1970), Hydraulic Design of Flood Control Channels*, Paragraph 14, "Riprap Protection."

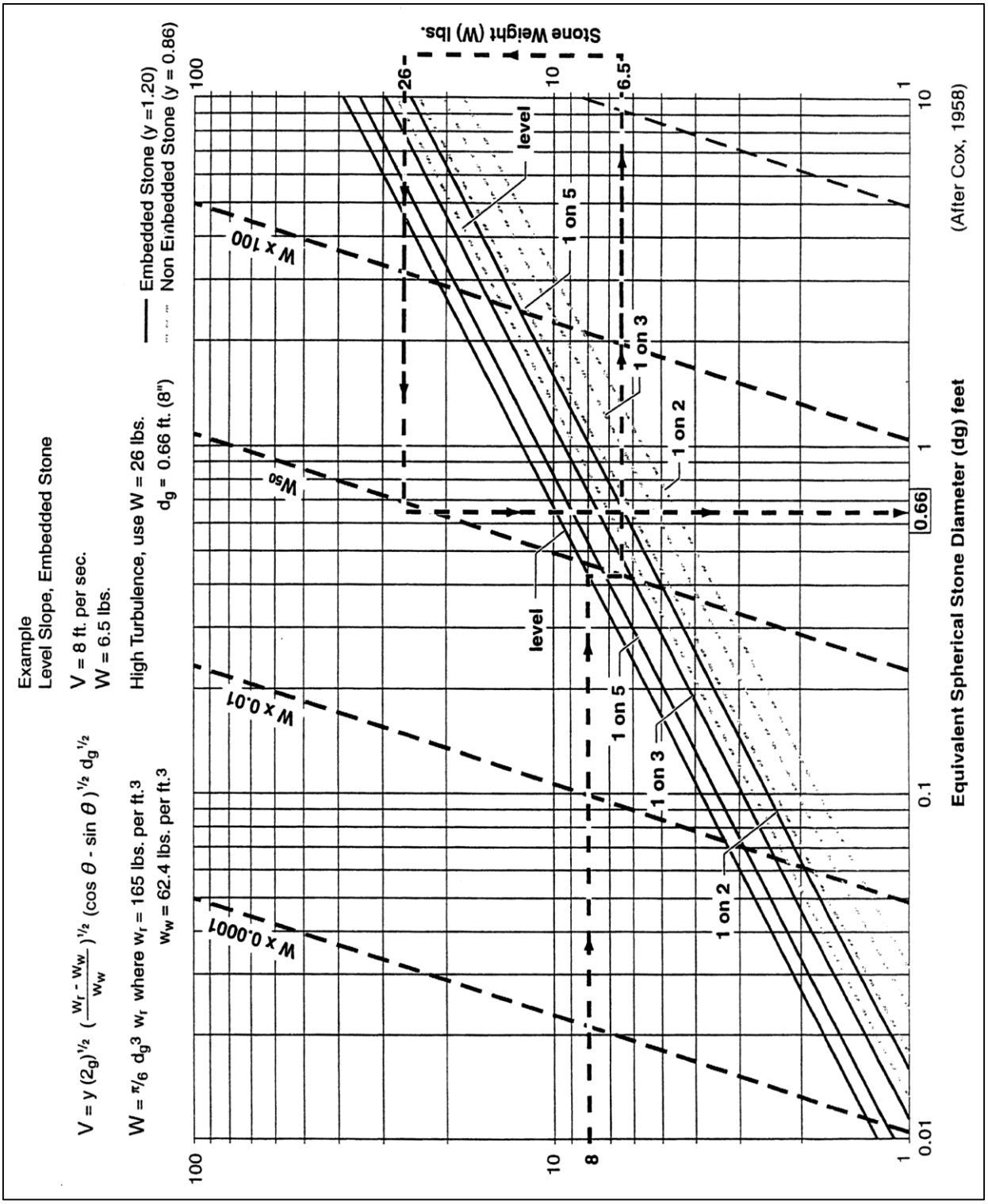


**Figure D.4- 16 Mean Channel Velocity vs Medium Stone Weight (W50) and Equivalent Stone Diameter**

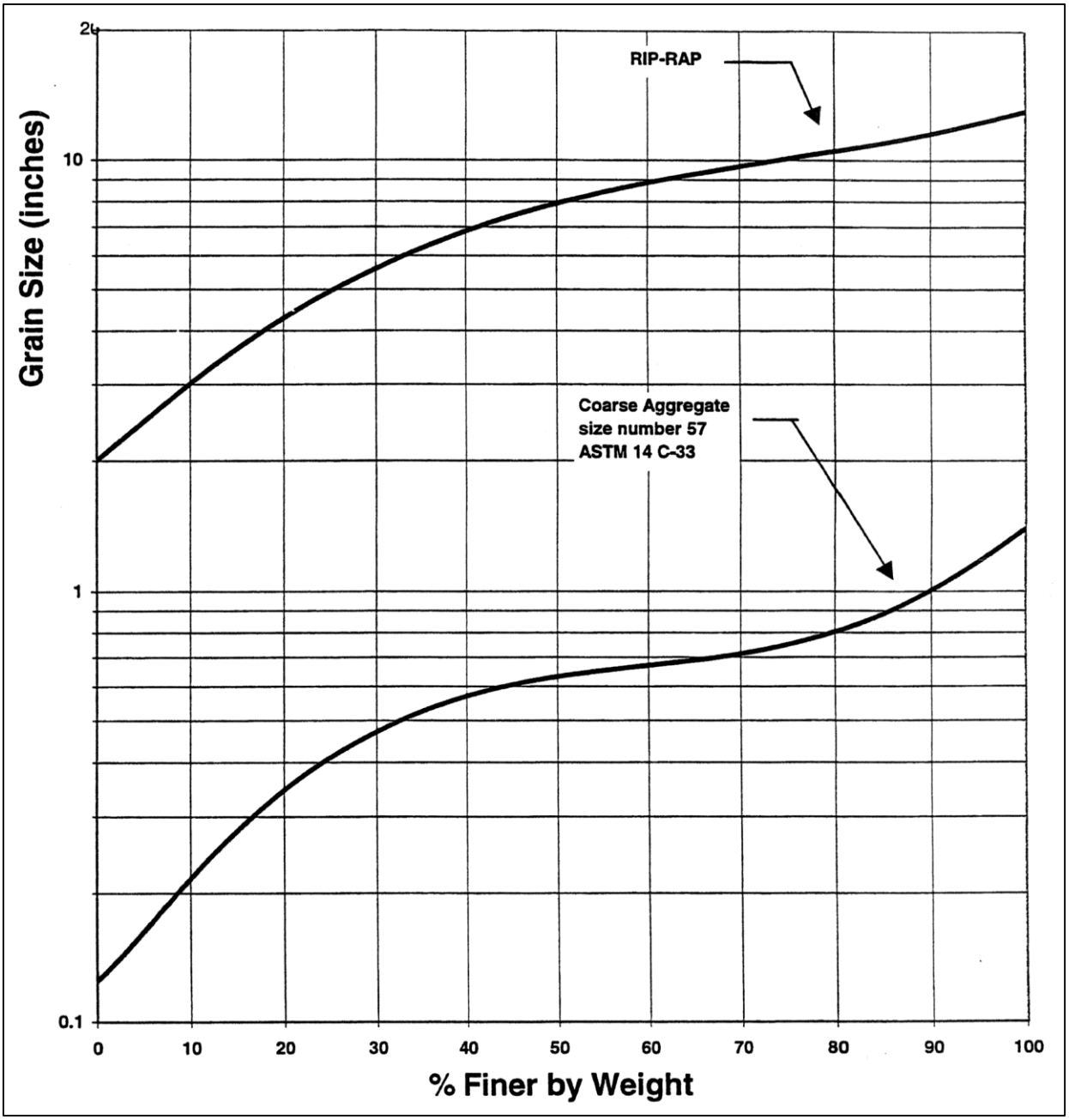


**Figure D.4- 17 Riprap Gradation Curve**

## D.5 Outfalls Systems

***Additional Requirements for the City of Auburn***

This section presents the methods, criteria and details for analysis and design of outfall systems. Properly designed outfalls are critical to reducing the chance of adverse impacts as the result of concentrated discharges from pipe systems and culverts, both onsite and downstream. Outfall systems include rock splash pads, flow dispersal trenches, gabion or other energy dissipaters, and tightline systems. A tightline system is typically a continuous length of pipe used to convey flows down a steep or sensitive slope with appropriate energy dissipation at the discharge end.

*D.5.1 Outfall Design Criteria*

All outfalls must be provided with an appropriate outlet / energy dissipation structure such as a dispersal trench, gabion outfall, or rock splash pad (see Figure D.5- 1 Pipe/Culvert Outfall Discharge Protection) as specified below and in Table D.5- 1 Rock Protection at Outfalls.

No erosion or flooding of downstream properties shall result from discharge from an outfall.

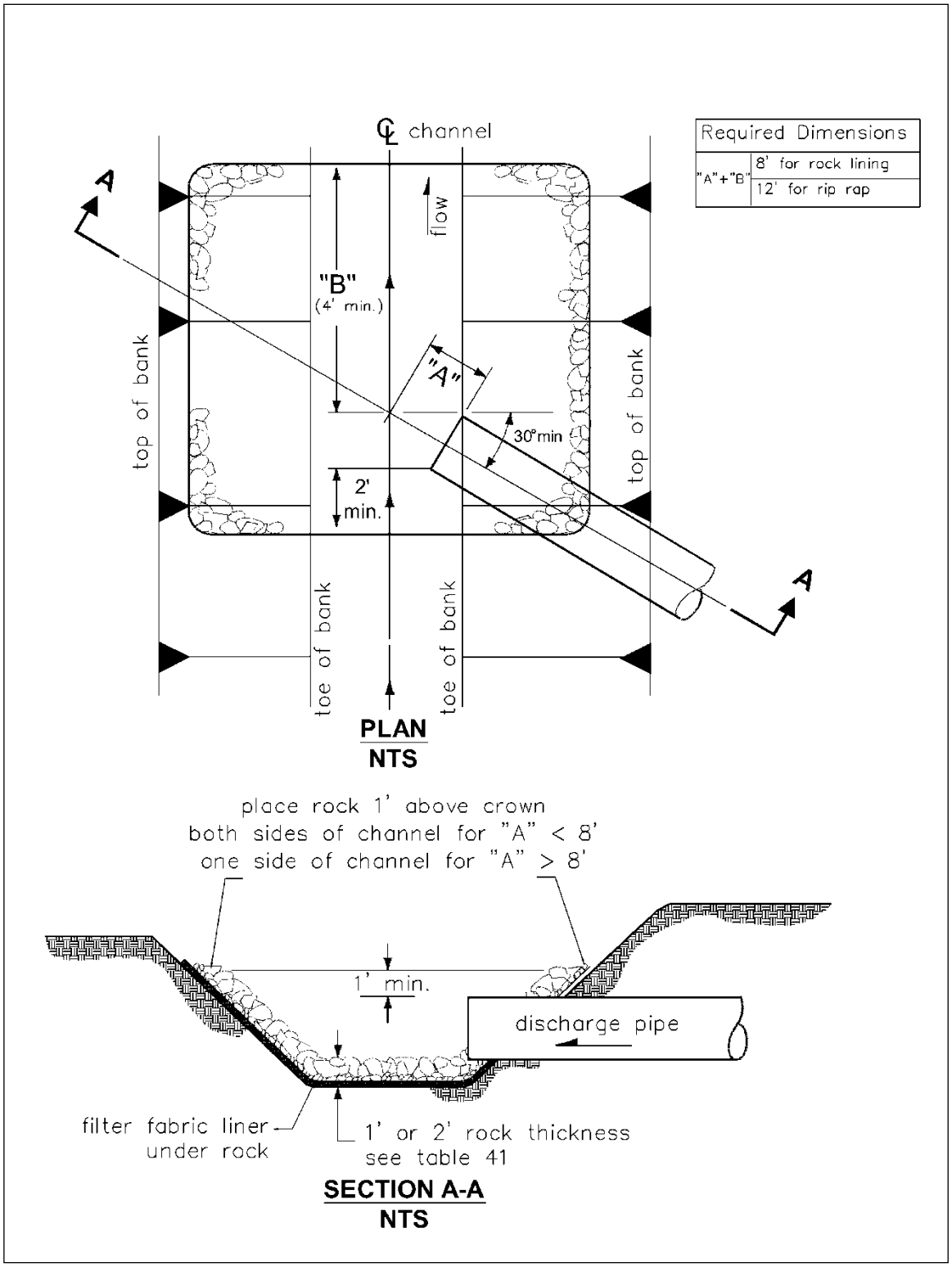


**Figure D.5- 1 Pipe/Culvert Outfall Discharge Protection**

| Discharge Velocity at Design Flow in feet per second (fps) | Required Protection | | | | |
|---|---|---|---|---|---|
| | Minimum Dimensions | | | | |
| | **Type** | **Thickness** | **Width** | **Length** | **Height** |
| 0 – 5 | Rock lining[1] | 1 foot | Diameter<br>+ 6 feet | 8 feet *or*<br>4 x diameter, whichever is greater | Crown<br>+ 1 foot |
| >5 - 10 | Riprap[2] | 2 feet | Diameter<br>+ 6 feet *or*<br>3 x diameter, whichever is greater | 12 feet *or*<br>4 x diameter, whichever is greater | Crown<br>+ 1 foot |
| >10 - 20 | Gabion outfall | As required | As required | As required | Crown<br>+ 1 foot |
| >20 | Engineered energy dissipater required | | | | |

1 **Rock lining** shall be quarry spalls with gradation as follows:

| | |
|---|---|
| Passing 8-inch square sieve: | 100% |
| Passing 3-inch square sieve: | 40 to 60% maximum |
| Passing ¾-inch square sieve: | 0 to 10% maximum |

2 **Riprap** shall be reasonably well graded with gradation as follows:

| | |
|---|---|
| Maximum stone size: | 24 inches (nominal diameter) |
| Median stone size: | 16 inches |
| Minimum stone size: | 4 inches |

Riprap sizing is based on outlet channel side slopes of approximately 3:1.

**Table D.5- 1 Rock Protection at Outfalls**

*D.5.1.1 Energy dissipation*

- For freshwater outfalls with a design velocity greater than 10 fps, a gabion dissipater or engineered energy dissipater may be required. The gabion outfall detail shown in Figure D.5- 2 Gabion Outfall Detail is illustrative only. A design engineered to specific site conditions must be developed.
- Engineered energy dissipaters, including stilling basins, drop pools, hydraulic jump basins, baffled aprons, and bucket aprons, are required for outfalls with design velocity greater than 20 fps. These should be designed using published or commonly known techniques found in such references as Hydraulic Design of Energy Dissipaters for Culverts and Channels, published by the Federal Highway Administration of the United States Department of Transportation; Open Channel Flow, by V.T. Chow; Hydraulic Design of Stilling Basins and Energy Dissipaters, EM 25, Bureau of Reclamation (1978); and other publications, such as those prepared by the Soil Conservation Service (now Natural Resource Conservation Service).
- Alternate mechanisms may be allowed with written approval of the City. Alternate mechanisms shall be designed using sound hydraulic principles with consideration of ease of construction and maintenance.
- Mechanisms that reduce velocity prior to discharge from an outfall are encouraged. Some of these are drop manholes and rapid expansion into pipes of much larger size. Other discharge end features may be used to dissipate the discharge energy. An example of an end feature is the use of a Diffuser Tee with holes in the front half, as shown in Figure D.5- 3 Diffuser Tee – Energy Dissipating End Feature Example.

The in-stream sample gabion mattress energy dissipater may not be acceptable within the ordinary high water mark of fish-bearing waters or where gabions will be subject to abrasion from upstream channel sediments. A gabion basket located outside the ordinary high water mark should be considered for these applications.

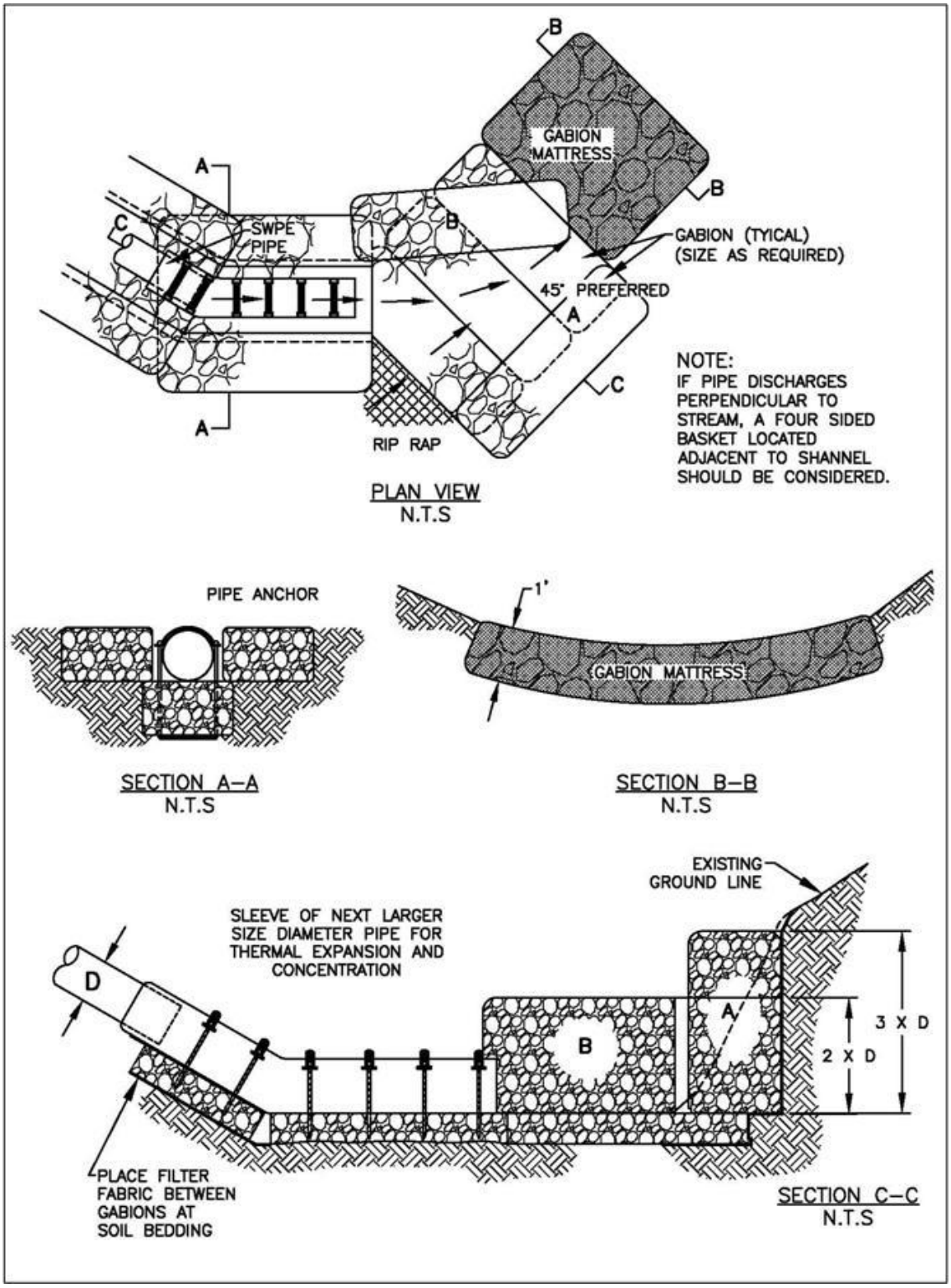


**Figure D.5- 2 Gabion Outfall Detail**

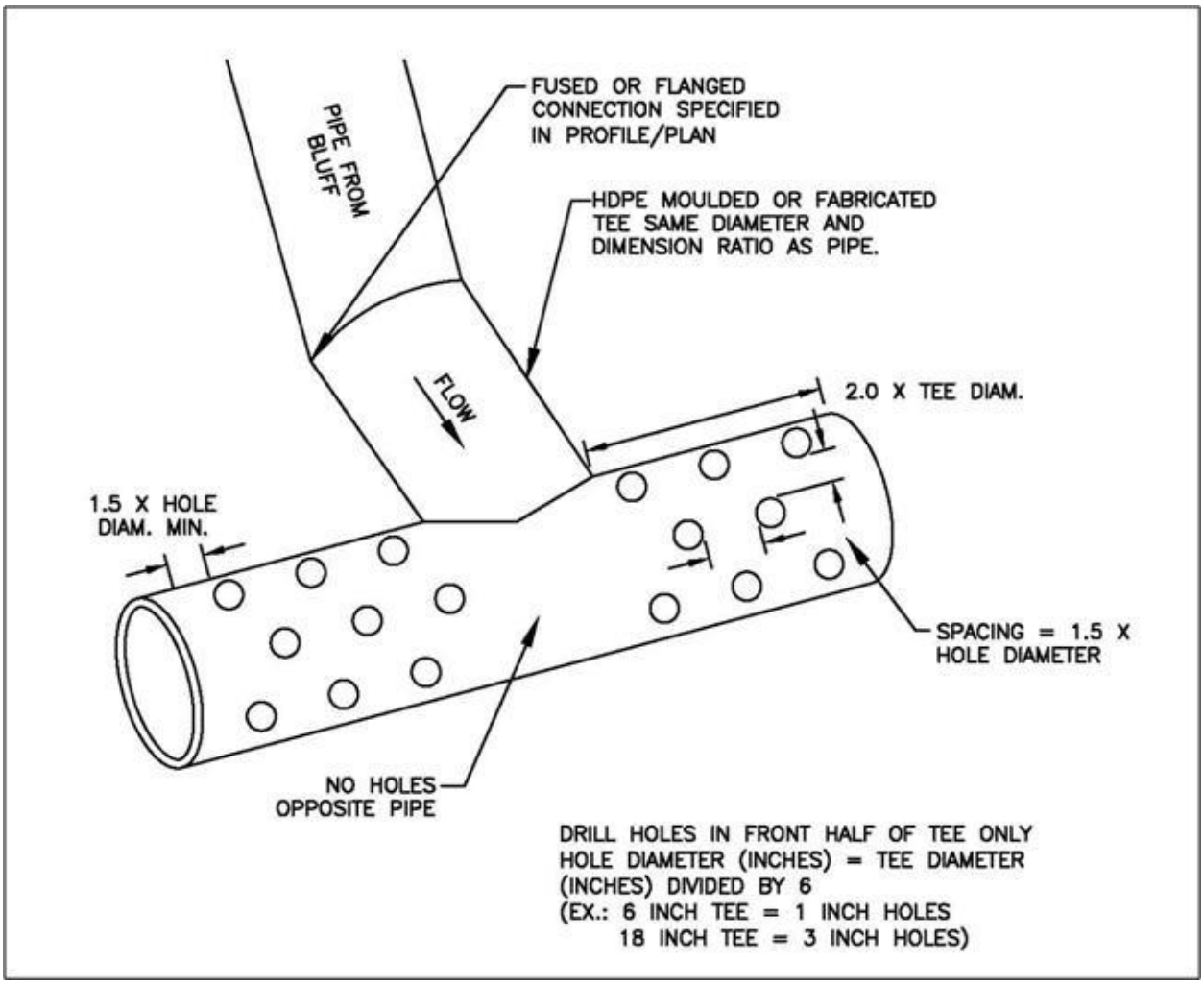


**Figure D.5- 3 Diffuser Tee – Energy Dissipating End Feature Example**

*D.5.1.2 Flow dispersion*

- The flow dispersal trenches shown in Figure D.5- 4 Flow Dispersal Trench and Figure D.5- 5 Alternative Flow Dispersal Trench shall not be used unless both criteria below are met:
    - An outfall is necessary to disperse concentrated flows across uplands where no conveyance system exists and the natural (existing) discharge is unconcentrated; and
    - The 100-year peak discharge rate is less than or equal to 0.5 cfs.
- Flow dispersion may be allowed for discharges greater than 0.5 cfs, providing that adequate design details and calculations for the dispersal trench to demonstrate that discharge will be sheet flow are submitted and approved by the City.

- For the dispersion trenches shown in Figure D.5- 4 Flow Dispersal Trench and Figure D.5- 5 Alternative Flow Dispersal Trench, a vegetated flowpath of at least 25 feet in length must be maintained between the outlet of the trench and any property line, structure, stream, wetland, or impervious surface. A vegetated flowpath of at least 50 feet in length must be maintained between the outlet of the trench and any steep slope. Sensitive area buffers may count towards flowpath lengths. For dispersion trenches discharging more than 0.5 cfs, additional vegetated flow path may be required.
- All dispersions systems shall be at least 10 feet from any structure or property line. If necessary, setbacks shall be increased from the minimum 10 feet in order to maintain a 1H:1V side slope for future excavation and maintenance.
- Dispersion systems shall be setback from sensitive areas, steep slopes, slopes 20% or greater, landslide hazard areas, and erosion hazard areas as governed by the Auburn City Code or as outlined in this manual, whichever is more restrictive.
- For sites with multiple dispersion trenches, a minimum separation of 10 feet is required between flowpaths. The City may require a larger separation based upon site conditions such as slope, soil type and total contributing area.
- Runoff discharged towards landslide hazard areas must be evaluated by a geotechnical engineer or a licensed geologist, hydrogeologist, or engineering geologist. The discharge point shall not be placed on or above slopes 20% (5H:1V) or greater or above erosion hazard areas without evaluation by a geotechnical engineer or qualified geologist and City approval.

Please refer to the Auburn City Code for additional requirements. Chapter 16.10 Critical Areas of the ACC may contain additional requirements depending upon the project proposal. A Hydraulic Project Approval (Chapter 77.55 RCW) and an Army Corps of Engineers permit may be required for any work within the ordinary high water mark.

Other provisions of that RCW or the Hydraulics Code - Chapter 220-110 WAC may also apply.

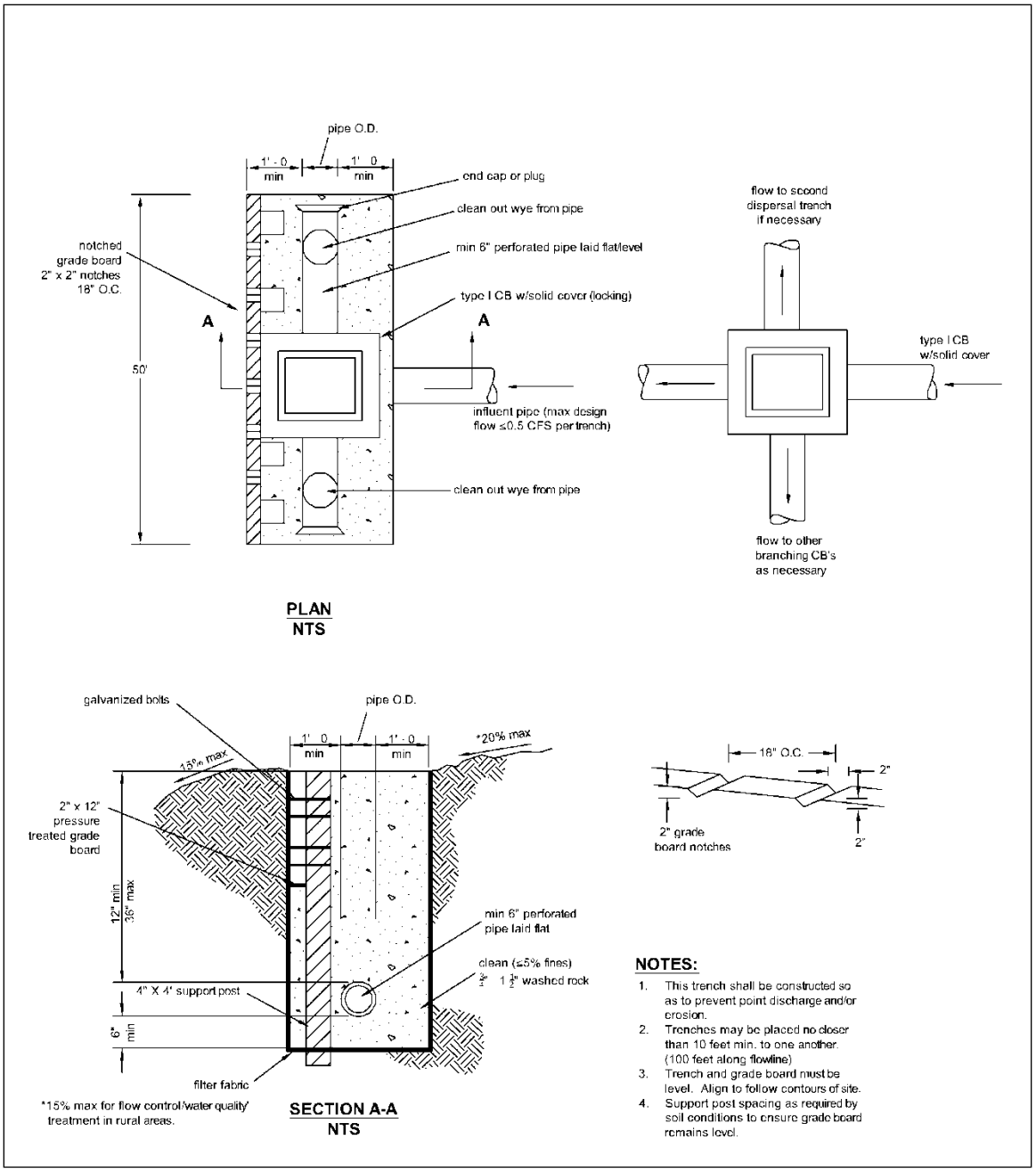


**Figure D.5- 4 Flow Dispersal Trench**

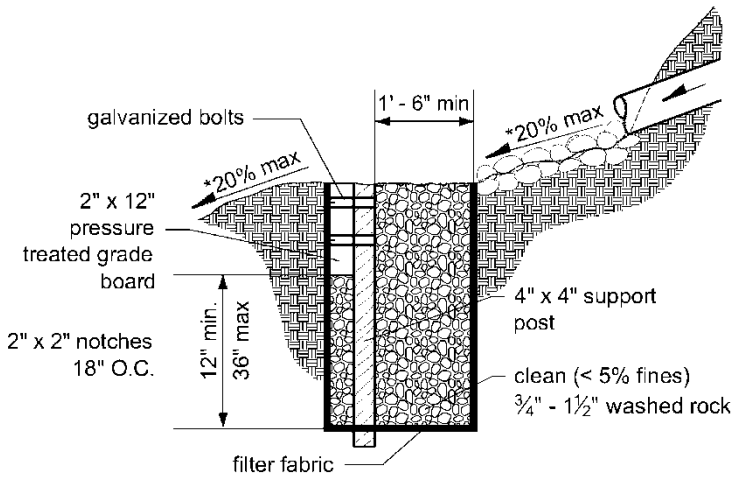


**NOTES:**

1. This trench shall be constructed so as to prevent point discharge and /or erosion.
2. Trenches may be placed no closer than 10 feet min. to one another. (100 feet along flowline)
3. Trench and grade board must be level. Align to follow contours of site.
4. Support post spacing as required by soil conditions to ensure grade board remains level.

**Figure D.5- 5 Alternative Flow Dispersal Trench**

*D.5.2 Tightline Systems*

- Outfall tightlines may be installed in trenches with standard bedding on slopes up to 20%. In order to minimize disturbance to slopes greater than 20%, it is recommended that tightlines be placed at grade with proper pipe anchorage and support.
- High density polyethylene pipe (HDPP) tightlines must be designed to address the material limitations, particularly thermal expansion and contraction and pressure design, as specified by the manufacturer.
- Due to the ability of HDPP tightlines to transmit flows of very high energy, special consideration for energy dissipation must be made. Details of a sample gabion mattress energy dissipater have

been provided as Figure D.5- 2 Gabion Outfall Detail. Flows of very high energy will require a specifically engineered energy dissipater structure.

- Tightline systems may be needed to prevent aggravation or creation of a downstream erosion problem.
- Tightline systems shall have appropriate anchoring designed, both along the slope and to provide anchoring for the entire system.

*D.5.3 Habitat Considerations*

- New pipe outfalls can provide an opportunity for low-cost fish habitat improvements. For example, an alcove of low-velocity water can be created by constructing the pipe outfall and associated energy dissipater back from the stream edge and digging a channel, over widened to the upstream side, from the outfall to the stream. Overwintering juvenile and migrating adult salmonids may use the alcove as shelter during high flows. Potential habitat improvements should be discussed with the Washington Department of Fish and Wildlife biologist prior to inclusion in design.
- Bank stabilization, bioengineering and habitat features may be required for disturbed areas.
- Outfall structures should be located where they minimize impacts to fish, shellfish, and their habitats.
- The City's Critical Area Code may regulate activities in these areas. See Chapter 16.10 of the ACC.

## D.6 Pump Systems

***Additional Requirements for the City of Auburn***

Pump systems are only allowed if applied for through the City's deviation process (see Section 2.8, Volume I of the COA Supplemental Manual). Feasibility of all other methods of gravity conveyance, infiltration, dispersion, and other on-site stormwater management strategies shall first be investigated and demonstrated to be infeasible in the following order of preference:

1. Infiltration of surface water on-site.
2. Dispersion of surface water on site.
3. Gravity connection to the City storm drainage system.
4. Pumping to a gravity system.

*D.6.1 Design Criteria*

If approved by the City's deviation process (see Chapter 1 of the Engineering Design Standards), the pump system must convey, at a minimum, the peak design flow for the 25-year 24-hour rainfall event. Pump capacity plus system storage or overflow, must convey or store the 100-year, 24-hour storm event.

*D.6.2 Pump Requirements*

If approved through the City's deviation process, proposed pump systems must meet the following minimum requirements:

- The pump system shall be used to convey water from one location or elevation to another within the project site.
- The gravity-flow components of the drainage system to and from the pump system must be designed so that pump failure does not result in flooding of a building or emergency access or overflow to a location other than the natural discharge point for the project site.
- The pump system must have a dual pump (alternating) equipped with emergency back-up power OR a single pump may be provided without back-up power if the design provides the 100-year 24-hour storage volume.
- Pumps, wiring, and control systems shall be intrinsically safe per IBC requirements.
- All pump systems must be equipped with an external pump failure and high water alarm system.
- The pump system will serve only one lot or business owner.
- The pump system must be privately owned and maintained.
- The pump system shall not be used to circumvent any other City drainage requirements. Construction and operation of the pump system shall not violate any City requirements.
- Pumping systems that are downstream of detention will require a detailed exhibit demonstrating that the pump flow discharges will meet the required pre-developed flow durations and peaks up to the 50 year storm flow.

*D.6.3 Additional Requirements*

Private pumped stormwater systems will require the following additional items:

- Operations and Maintenance Manual describing the system itself and all required maintenance and operating instructions, including procedures to follow in the event of a power outage. All the requirements of Section 4.6, Volume V of the SWMMWW shall be included in the O&M manual.
- Notice to Title on the property outlining that a private stormwater system is constructed on the site and that the maintenance of that system is the responsibility of the property owner. Wording of the Notice to Title shall be approved by the City prior to placing the Notice.

- Operations and Maintenance Agreement signed by the property owner and the City. After signature by the City, the agreement shall be recorded with the appropriate County and listed in the Notice of Title with the recording number.

All fees associated with preparing and recording documents and placing the Notice to Title shall be the responsibility of the applicant.

*D.6.4 Sump Pumps*

The above pump requirements do not apply to internal sump pumps. However, internal sump pumps **do require** a permit prior to connection to the City storm drainage system.

- Sump pumps shall be sized to properly remove water from basements and crawl spaces.
- Sump pumps shall NOT be connected to the sanitary sewer system.
- Consult the pump manufacturer or an engineer for appropriate sizing of a sump pump.

## D.7 Easements and Access

***Additional Requirements for the City of Auburn***

Refer to Appendix K, Volume I of the COA Supplemental Manual for storm facility access criteria.

# Appendix III-E City of Auburn Design Storm

| Return Frequency<br>24-Hour Storm Event (Years) | Precipitation<br>(Inches) |
|---|---|
| 0.5 | 1.44 |
| 2 | 2.0 |
| 5 | 2.5 |
| 10 | 3.0 |
| 25 | 3.5 |
| 50 | 3.5 |
| 100 | 4.0 |

**Table E- 1 Design Storm Precipitation Values**

The depth of a 7-day, 100-year storm can be determined in one of three ways:

- Use 12 inches for the lowland areas between sea level and 650 MSL.
- Use the U.S. Department of Commerce Technical Paper No. 49, "Two- to Ten-Day Precipitation for Return Periods of 2 to 100 Years in the Contiguous United States."
- Use the U.S. Department of Commerce NOAA Atlas 2, "Precipitation Frequency Atlas of the Western United States," Volume IX – Washington, 24-hour, 100-year Isopluvials and add 6.0 inches to the appropriate isopluvial for the project area.

# Appendix III-F Procedure for Conducting a Pilot Infiltration Test

The Pilot Infiltration Test (PIT) consists of a relatively large-scale infiltration test to better approximate infiltration rates for design of stormwater infiltration facilities. The PIT reduces some of the scale errors associated with relatively small-scale double ring infiltrometer or "stove-pipe" infiltration tests. It is not a standard test but rather a practical field procedure recommended by Ecology's Technical Advisory Committee.

*Infiltration Test*

- Excavate the test pit to the depth of the bottom of the proposed infiltration facility. Lay back the slopes sufficiently to avoid caving and erosion during the test.
- The horizontal surface area of the bottom of the test pit should be approximately 100 square feet. For small drainages and where water availability is a problem smaller areas may be considered as determined by the site professional.
- Accurately document the size and geometry of the test pit.
- Install a vertical measuring rod (minimum 5-ft. long) marked in half-inch increments in the center of the pit bottom.
- Use a rigid 6-inch diameter pipe with a splash plate on the bottom to convey water to the pit and reduce side-wall erosion or excessive disturbance of the pond bottom. Excessive erosion and bottom disturbance will result in clogging of the infiltration receptor and yield lower than actual infiltration rates.
- Add water to the pit at a rate that will maintain a water level between 3 and 4 feet above the bottom of the pit. A rotometer can be used to measure the flow rate into the pit.

A water level of 3 to 4 feet provides for easier measurement and flow stabilization control. However, the depth should not exceed the proposed maximum depth of water expected in the completed facility.

Every 15 – 30 min, record the cumulative volume and instantaneous flow rate in gallons per minute necessary to maintain the water level at the same point (between 3 and 4 feet) on the measuring rod.

Add water to the pit until one hour after the flow rate into the pit has stabilized (constant flow rate) while maintaining the same pond water level (usually 17 hours).

After the flow rate has stabilized, turn off the water and record the rate of infiltration in inches per hour from the measuring rod data, until the pit is empty.

*Data Analysis*

Calculate and record the infiltration rate in inches per hour in 30 minutes or one-hour increments until one hour after the flow has stabilized.

Use statistical/trend analysis to obtain the hourly flow rate when the flow stabilizes. This would be the lowest hourly flow rate.

Apply appropriate correction factors for site heterogeneity, anticipated level of maintenance and treatment to determine the site-specific design infiltration rate (see Table F- 1 In-Situ Infiltration Measurement Correction Factors to Estimate Long-Term Infiltration Rates).

**Example**

The area of the bottom of the test pit is 8.5-ft. by 11.5-ft.

Water flow rate was measured and recorded at intervals ranging from 15 to 30 minutes throughout the test. Between 400 minutes and 1,000 minutes the flow rate stabilized between 10 and 12.5 gallons per minute or 600 to 750 gallons per hour, or an average of (9.8 + 12.3) / 2 = 11.1 inches per hour.

Applying a correction factor of 5.5 for gravelly sand in Table F- 1 the design long-term infiltration rate becomes 2 inches per hour, anticipating adequate maintenance and pre-treatment.

***Table F-1. Correction Factors to be Used with In-Situ Infiltration Measurements to Estimate Long-Term Design Infiltration Rates***

| **Issue** | **Partial Correction Factor** |
|---|---|
| Site variability and number of locations tested | $CF_y$ = 1.5 to 6 |
| Degree of long-term maintenance to prevent siltation and bio-buildup | $CF_m$ = 2 to 6 |
| Degree of influent control to prevent siltation and bio-buildup | $CF_i$ = 2 to 6 |
| Total Correction Factor (CF) = $CF_y + CF_m + CF_i$ | |

Table F- 1 In-Situ Infiltration Measurement Correction Factors to Estimate Long-Term Infiltration Rates